THIRD ANGLE PROJECTION

ITEM CODE	CAPACITANCE μF (*)	DIMENSIONS L	T	H	S	d	ITEM CODE	CAPACITANCE μF (*)	DIMENSIONS L	T	H	S	d
ECWF4223 () LB	0. 022 (223)	12. 5	5. 8	8. 6	7. 5	0. 6	ECWF4244 () LB	0. 24 (244)	18. 0	8. 3	13. 0	10. 0	0. 8
〃 4243 () LB	0. 024 (243)	〃	6. 0	8. 8	〃	〃	〃 4274 () LB	0. 27 (274)	〃	8. 8	13. 4	〃	〃
〃 4273 () LB	0. 027 (273)	〃	6. 2	9. 0	〃	〃	〃 4304 () LB	0. 3 (304)	〃	9. 2	13. 9	〃	〃
〃 4303 () LB	0. 03 (303)	〃	6. 4	9. 3	〃	〃	〃 4334 () LB	0. 33 (334)	〃	9. 6	14. 3	〃	〃
〃 4333 () LB	0. 033 (333)	〃	6. 7	9. 5	〃	〃	〃 4364 () LB	0. 36 (364)	〃	9. 9	14. 7	〃	〃
〃 4363 () LB	0. 036 (363)	〃	5. 7	8. 4	〃	〃	〃 4394 () LB	0. 39 (394)	〃	10. 3	15. 1	〃	〃
〃 4393 () LB	0. 039 (393)	〃	5. 8	8. 6	〃	〃	〃 4434 () LB	0. 43 (434)	〃	10. 7	15. 6	〃	〃
〃 4433 () LB	0. 043 (433)	〃	6. 0	8. 8	〃	〃	〃 4474 () LB	0. 47 (474)	〃	11. 2	16. 1	〃	〃
〃 4473 () LB	0. 047 (473)	〃	6. 2	9. 0	〃	〃	〃 4514 () LB	0. 51 (514)	20. 5	10. 3	16. 8	12. 5	〃
〃 4513 () LB	0. 051 (513)	〃	6. 4	9. 2	〃	〃	〃 4564 () LB	0. 56 (564)	〃	10. 7	17. 3	〃	〃
〃 4563 () LB	0. 056 (563)	〃	6. 6	9. 4	〃	〃	〃 4624 () LB	0. 62 (624)	〃	11. 3	17. 9	〃	〃
〃 4623 () LB	0. 062 (623)	13. 0	6. 8	9. 6	〃	0. 8	〃 4684 () LB	0. 68 (684)	〃	11. 8	18. 5	〃	〃
〃 4683 () LB	0. 068 (683)	〃	7. 0	9. 9	〃	〃	〃 4754 () LB	0. 75 (754)	〃	12. 3	19. 1	〃	〃
〃 4753 () LB	0. 075 (753)	〃	7. 3	10. 1	〃	〃	〃 4824 () LB	0. 82 (824)	23. 0	11. 8	18. 5	〃	〃
〃 4823 () LB	0. 082 (823)	〃	7. 5	10. 4	〃	〃	〃 4914 () LB	0. 91 (914)	〃	12. 4	19. 2	〃	〃
〃 4913 () LB	0. 091 (913)	〃	7. 8	10. 7	〃	〃	〃 4105 () LB	1. 0 (105)	〃	13. 0	19. 8	〃	〃
〃 4104 () LB	0. 1 (104)	15. 5	6. 5	11. 0	〃	〃	〃 4115 () LB	1. 1 (115)	〃	13. 6	20. 5	〃	〃
〃 4114 () LB	0. 11 (114)	〃	6. 8	11. 3	〃	〃	〃 4125 () LB	1. 2 (125)	28. 0	12. 3	19. 1	17. 5	〃
〃 4124 () LB	0. 12 (124)	〃	7. 0	11. 5	〃	〃	〃 4135 () LB	1. 3 (135)	〃	12. 8	19. 6	〃	〃
〃 4134 () LB	0. 13 (134)	〃	7. 2	11. 8	〃	〃	〃 4155 () LB	1. 5 (155)	〃	13. 7	20. 7	〃	〃
〃 4154 () LB	0. 15 (154)	〃	7. 6	12. 2	〃	〃	〃 4165 () LB	1. 6 (165)	〃	14. 2	21. 2	〃	〃
〃 4164 () LB	0. 16 (164)	〃	7. 8	12. 4	〃	〃	〃 4185 () LB	1. 8 (185)	〃	15. 2	22. 2	〃	〃
〃 4184 () LB	0. 18 (184)	〃	8. 2	12. 8	〃	〃	〃 4205 () LB	2. 0 (205)	〃	16. 0	23. 1	〃	〃
〃 4204 () LB	0. 2 (204)	〃	8. 6	13. 3	〃	〃	〃 4225 () LB	2. 2 (225)	〃	16. 8	24. 0	〃	〃
〃 4224 () LB	0. 22 (224)	〃	9. 0	13. 6	〃	〃	〃 4245 () LB	2. 4 (245)	〃	17. 5	24. 8	〃	〃

ALTERATION

ISSUE	DESCRIPTION	DATE
1	Company name changed	Oct. 1 2004
2	Company name changed	Apr. 1 2005
3	Company name changed	Apr. 1 2006
4	Company name changed	Apr. 1 2008
5	Company name changed	Apr. 1 2012
6	Company name changed	Apr. 1 2013
7	Company name changed	Apr. 1 2015

SPECIFICATIONS No.

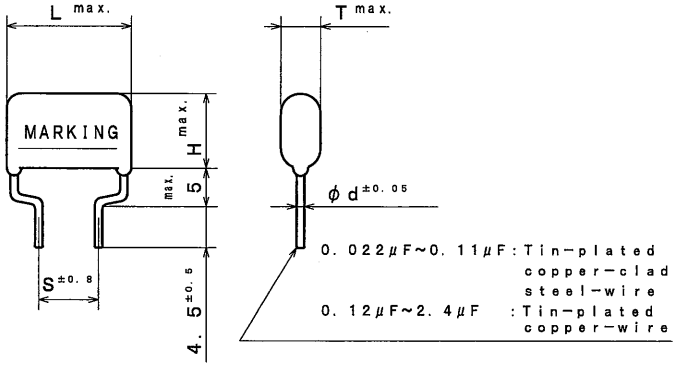

ITEM CODE NUMBER STRUCTURE

ECWF 4105JLB (400VDC, 1. 0μF, ±5%)

- Lead forming
- Radial leads
- Capacitance tolerance (H=±3%, J=±5%)
- Capacitance : See table (*)
- Rated voltage (4=400VDC)

CONSTRUCTION

The capacitor is of non-inductive construction, wound with metallized polypropylene film dielectric.
The capacitor is enclosed in non-combustible epoxy resin and has two leads.

MARKING

Marking comprises capacitance, capacitance tolerance, rated voltage, manufacturer's trademark, type name "WFL" and manufacturer's date code.

PROPERTIES

Capacitance	:	See table at 1kHz
Capacitance tolerance	:	±3% (H), ±5% (J)
Rated voltage	:	400VDC
Withstand voltage	:	Rated voltage × 150% for 60s
Insulation resistance	:	C≦0. 33μF : ≧9, 000MΩ } at 100VDC, 20℃ for 60s
	:	C>0. 33μF : ≧3, 000MΩ·μF } at 100VDC, 20℃ for 60s
Dissipation factor	:	≦0. 05% at 1kHz, 20℃
Category temperature range	:	From −40℃ to +105℃ (including temperature rise on unit surface)

(example)

(223~913)	(104, 114)	(124~245)
WFL223J 400V date code	WFL104J 400V M date code	WFL124J 400V M date code

※The marking of 'WFL' with the underline means that the copper wire is used for the lead wire, while the one without the underline means that tinned copper clad-steel wire is used.

Reference

DESIGN	M. Mekata
CHECKED	M. Yamaguchi
APPROVAL	Y. Takata
ESTABLISHMENT	Feb. 3. 2003
TYPE NAME	ECWF 4*** () LB
NAME	METALLIZED POLYPROPYLENE CAPACITOR
DRAWING NAME	PRODUCT DRAWING
DRAWING No.	3011J-J-E (1/1)

Toyama·Matsue Plant
Device Solutions Business Division
Panasonic Corporation

DO NOT SCALE DRAWING REVISIONS INDICATED BY Δ ALL DIMENSIONS ARE IN MILLIMETERS