THIRD ANGLE PROJECTION

ITEM CODE	CAP. μF (*)	CAP. (μF)	DIMENSIONS L	T	H	F	G	d
ECQE12332 () FZ	0.0033 (332)	0.0033	15.5	6.0	11.5	12.5	1.0	0.6
〃 12392 () FZ	0.0039 (392)	0.0039	〃	6.5	12.0	〃	〃	〃
〃 12472 () FZ	0.0047 (472)	0.0047	〃	7.0	12.5	〃	〃	〃
〃 12562 () FZ	0.0056 (562)	0.0056	〃	7.5	13.0	〃	〃	〃
〃 12682 () FZ	0.0068 (682)	0.0068	〃	〃	15.0	〃	〃	〃
〃 12822 () FZ	0.0082 (822)	0.0082	21.0	5.0	12.0	17.5	〃	〃
〃 12103 () FZ	0.01 (103)	0.01	〃	〃	12.5	〃	〃	〃
〃 12123 () FZ	0.012 (123)	0.012	〃	5.5	13.0	〃	〃	〃
〃 12153 () FZ	0.015 (153)	0.015	〃	6.0	13.5	〃	〃	〃
〃 12183 () FZ	0.018 (183)	0.018	〃	6.5	14.5	〃	〃	0.8
〃 12223 () FZ	0.022 (223)	0.022	〃	7.0	15.0	〃	〃	〃
〃 12273 () FZ	0.027 (273)	0.027	26.0	6.0	15.5	22.5	〃	〃
〃 12333 () FZ	0.033 (333)	0.033	〃	6.5	16.0	〃	〃	〃
〃 12393 () FZ	0.039 (393)	0.039	〃	7.0	16.5	〃	〃	〃
〃 12473 () FZ	0.047 (473)	0.047	〃	8.0	17.0	〃	〃	〃
〃 12563 () FZ	0.056 (563)	0.056	31.0	7.5	〃	27.5	〃	〃
〃 12683 () FZ	0.068 (683)	0.068	〃	8.0	17.5	〃	〃	〃
〃 12823 () FZ	0.082 (823)	0.082	〃	9.0	18.5	〃	〃	〃
〃 12104 () FZ	0.1 (104)	0.1	〃	10.0	19.5	〃	〃	〃
〃 12124 () FZ	0.12 (124)	0.12	〃	11.5	20.5	〃	1.5	〃
〃 12154 () FZ	0.15 (154)	0.15	〃	12.0	23.0	〃	〃	〃
〃 12184 () FZ	0.18 (184)	0.18	〃	13.0	24.5	〃	〃	〃
〃 12224 () FZ	0.22 (224)	0.22	〃	14.5	26.5	〃	〃	〃

TOL. SYMBOL (J or K or M)

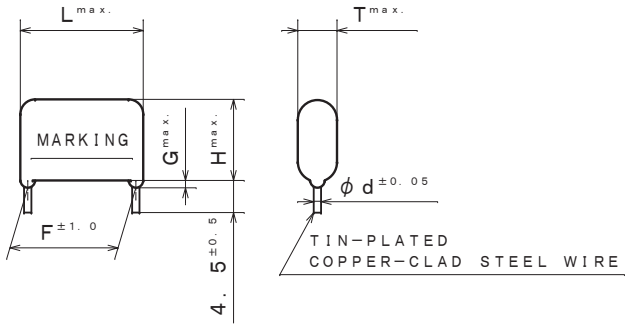

ITEM CODE NUMBER STRUCTURE

ECQE 12 103 K F Z (1250VDC, 0.01μF, ±10%)

- Short leads
- Radial leads
- Capacitance tolerance (J=±5%, K=±10%, M=±20%)
- Capacitance (*)
- Rated voltage (12:1250VDC)

CONSTRUCTION

The capacitor is of non-inductive construction, wound with metallized polyester film dielectric.
The capacitor is enclosed in non-combustible epoxy resin and has two leads.

MARKING

Marking comprises capacitance, capacitance tolerance, rated voltage, type name, manufacturer's trademark and date code.

PROPERTIES

Capacitance	:See table at 1kHz
Capacitance tolerance	:±5%(J), ±10%(K), ±20%(M) at 1kHz
Rated voltage	:125VAC/1250VDC (Derating of rated voltage by 1.25%/℃ at more than 85℃)
Withstand voltage (terminal-terminal)	:1250VDC×175% for 2s to 5s (1000VAC for 60s)
(terminal-enclosure)	:1500VAC for 60s
Insulation resistance	:≧10000MΩ at 100VDC, 20℃ for 60s
	:≧ 2000MΩ at 500VDC, 20℃ for 60s
Dissipation factor	:≦1.0% at 1kHz, 20℃
Category temperature range (including temperature rise on unit surface)	:From −40℃ to +105℃

MARKING EXAMPLE

Ⓜ 103 M
Q-E 1250V
125V~ [ ] ← date code

DO NOT SCALE DRAWING REVISIONS INDICATED BY Δ ALL DIMENSIONS ARE IN MILLIMETERS

ALTERATION		
ISSUE	DESCRIPTION	DATE
SPECIFICATIONS No.		

DESIGN	M. MEKADA
CHECK	H. TOCHIDA
APPROVAL	T. KATO
ESTABLISHMENT	Nov. 1. 2022
TYPE NAME	ECQE12***() FZ
NAME	Metallized Polyester Film Capacitor
DRAWING NAME	PRODUCT DRAWING
DRAWING No.	M007M-J-E (1/1)

REFERENCE

Film Capacitor Business Unit
Device Solutions Business Division
Panasonic Industry Co., Ltd.