Equivalent circuit models

Power Choke Coils for Automotive application

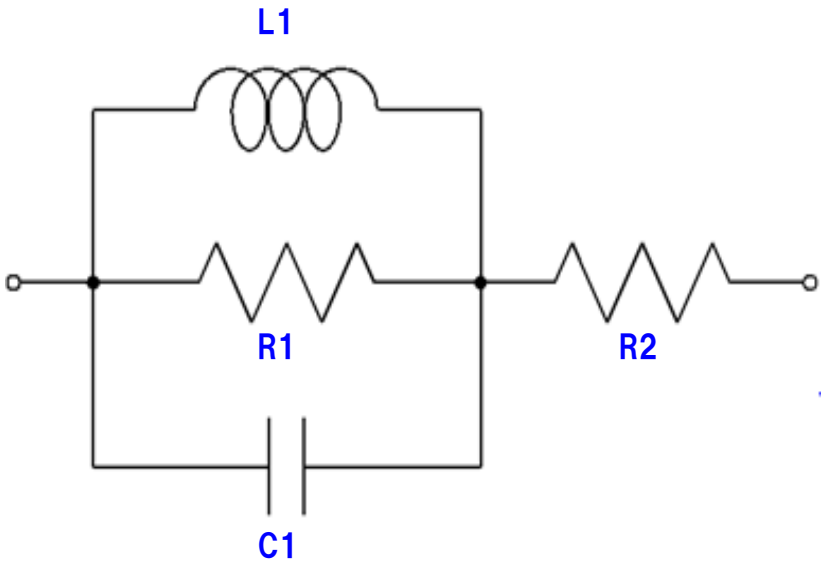

Type	Part Number	L1(μH)	C1(p)	R2(Ω)	R1(Ω)
7mm Square	ETQP5M4R7TTM	4.5021	18.3	0.0139	8474.30