Product No. : EYLGMFA265AR

Panasonic

◆Dimensions

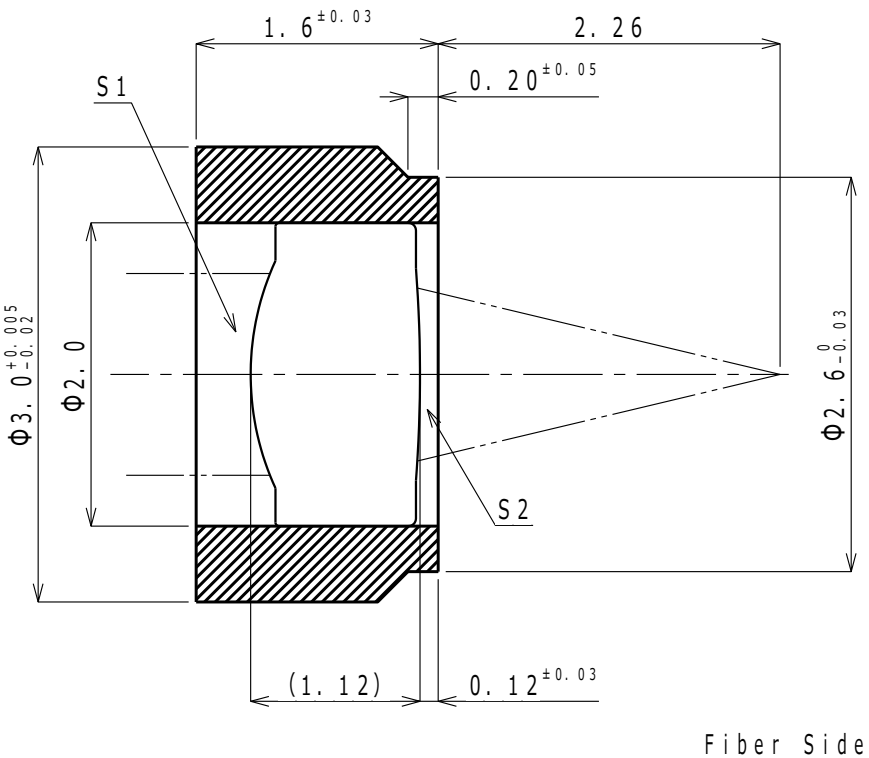

◆Optical Characteristics

	Items		Unit	Design
1	Design wavelength		nm	1550
2	Focal length		mm	3.02
3	Numerical aperture	S1		
4		S2		0.22
5	Magnification			
6	Working distance		mm	2.26
7	Conjugate distance		mm	
8	Effective diameter	S1	mm	Φ1.33
9		S2	mm	Φ1.14
10	Beam Diameter		mm	Φ0.60
11	Transmittance (at 1260-1650 nm)		%	＞97
12	Wavefront aberration		λ_{rms}	≦0.035

Remarks:

◆Materials

Glass material	K-PBK40
Barrel material	SF20F