Panasonic
INDUSTRY

Your Committed Enabler

Products Catalog

Conductive Polymer Aluminum Solid Capacitors

OS-CON

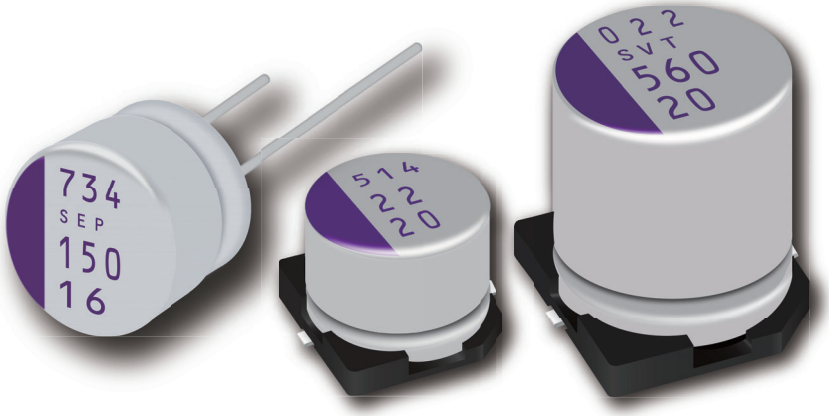

2024.11

Conductive Polymer Aluminum Solid Capacitors INDEX

Item			Page
Safety and Legal Matters to Be Observed / Matters to Be Observed When Using This Product			1
Selection guige		Line-up	5
		Series flow chart	8
		Voltage-Capacitance table	10
		Explanation of part numbers	22
		Mounting specifications	23
		Packing specifications	24
Series	Surface mount type	SVT series : 125℃ 2000 h	26
		SVPT series : 105℃ 20000 h	28
		SVF series : High voltage / 125℃ 1000 h	30
		SVPK series : High voltage / 125℃ 1000 h	32
		SXV series : Super high voltage / 125℃ 1000 h	34
		SVPG series : High ripple current	36
		SVPF series : High voltage / 105℃ 5000 h	38
		SVPA series : Low ESR	40
		SVPB series : Low profile	42
		SVPC series : Low ESR	44
		SVPD series : 125 ℃ 2000 h	46
		SVPE series : Low ESR	48
		SVPS series : 105 ℃ 5000 h	50
		SVQP series : 125 ℃ 1000 h	52
		SVP series : Standard	54
	Radial lead type	SEF series : High voltage / 125℃ 1000 h	56
		SEK series : High voltage / 125℃ 1000 h	58
		SEPG series : High ripple current	60
		SXE series : Super high voltage / 125℃ 1000 h	62
		SEPF series : High voltage / 105℃ 5000 h	64
		SEPC series : Super low ESR	66
		SEQP series : High voltage	68
		SEP series : Standard	70

Safety and Legal Matters to Be Observed

Product specifications and applications

■ Please be advised that this product and product specifications are subject to change without notice for improvement purposes. Therefore, please request and confirm the latest delivery specifications that explain the specifications in detail before the final design, or purchase or use of the product, regardless of the application. In addition, do not use this product in any way that deviates from the contents of the company's delivery specifications.

■ Unless otherwise specified in this catalog or the product specifications, this product is intended for use in general electronic equipment (AV products, home appliances, commercial equipment, office equipment, information and communication equipment, etc.).
When this product is used for the following special cases, the specification document suited to each application shall be signed/sealed (with Panasonic Industry and the user) in advance..These include applications requiring special quality and reliability, wherein their failures or malfunctions may directly threaten human life or cause harm to the human body (e.g.: space/aircraft equipment, transportation/traffic equipment, combustion equipment, medical equipment, disaster prevention/crime prevention equipment, safety equipment, etc.).

Safety design and product evaluation

■ Please ensure safety through protection circuits, redundant circuits, etc., in the customer's system design so that a defect in our company's product will not endanger human life or cause other serious damage.

■ This catalog shows the quality and performance of individual parts. The durability of parts varies depending on the usage environment and conditions. Therefore, please ensure to evaluate and confirm the state of each part after it has been mounted in your product in the actual operating environment before use.
If you have any doubts about the safety of this product, then please notify us immediately, and be sure to conduct a technical review including the above protection circuits and redundant circuits at your company.

Laws / Regulations / Intellectual property

■ The transportation of dangerous goods as designated by UN numbers, UN classifications, etc., does not apply to this product. In addition, when exporting products, product specifications, and technical information described in this catalog, please comply with the laws and regulations of the countries to which the products are exported, especially those concerning security export control.

■ Each model of this product complies with the RoHS Directive (Restriction of the use of hazardous substances in electrical and electronic equipment) (2011/65/EU and (EU) 2015/863). The date of compliance with the RoHS Directive and REACH Regulation varies depending on the product model.
Further, if you are using product models in stock and are not sure whether or not they comply with the RoHS Directive or REACH Regulation, please contact us by selecting "Sales Inquiry" from the inquiry form.

■ During the manufacturing process of this product and any of its components and materials to be used, Panasonic Industry does not intentionally use ozone-depleting substances stipulated in the Montreal Protocol and specific bromine-based flame retardants such as PBBs (Poly-Brominated Biphenyls) / PBDEs (Poly-Brominated Diphenyl Ethers). In addition, the materials used in this product are all listed as existing chemical substances based on the Act on the Regulation of Manufacture and Evaluation of Chemical Substances.

■ With regard to the disposal of this product, please confirm the disposal method in each country and region where it is incorporated into your company's product and used.

■ The technical information contained in this catalog is intended to show only typical operation and application circuit examples of this product. This catalog does not guarantee that such information does not infringe upon the intellectual property rights of Panasonic Industry or any third party, nor imply that the license of such rights has been granted.

■ Design, materials, or process related to technical owned by Panasonic Industry are subject to change without notice.

Panasonic Industry will assume no liability whatsoever if the use of our company's products deviates from the contents of this catalog or does not comply with the precautions. Please be advised of these restrictions.

Matters to Be Observed When Using This Product
(Conductive Polymer Aluminum Solid Capacitors / OS-CON)

Use environments and cleaning conditions

■ This product (capacitor) is intended for standard general-purpose use in electronic equipment, and is not designed for use in the specific environments described below. Using the product in such specific environments or service conditions, therefore, may affect the performance of the product.
Please check with us about the performance and reliability of the product first before using the product.

(1) Used in liquid, such as water, oil, chemicals, and organic solvents.
(2) Used in a place exposed to direct sunlight, an outdoor place with no shielding, or a dusty place.
(3) Used in a wet place (dew concentration on a resistor, water leakage, etc.), a place exposed to sea breeze, or a place filled with a corrosive gas, such as Cl_2, H_2S, NH_3, SO_2, or NO_X.
(4) Used in an environment where static electricity and electromagnetic waves are strong.
(5) The product is located close to a heating component or a flammable material, such as a vinyl cable, is placed near the product.
(6) The product is used sealed with a resin, etc.
(7) Solder flux of the soldered product is cleansed with a solvent, water, and a water-soluble cleaner.
(Be careful with water soluble solder flux.)
(8) Used in an environment where an acidic or alkali atmosphere is present.
(9) Used in an environment where excessive vibration or impact is applied to the product.
(10) Used under a low atmospheric pressure condition or depressurized condition.

■ Cleaning can be performed with cleaning agents, including higher-grade alcohol-based cleaning solutions such as Pine Alpha ST-100S, Cleanthru 750H, 750L, 710M, 750K, Techno Care FRW14-17, CFC substitutes such as AK-225AES, and IPA. Please confirm the following precautions before cleaning.

(1) Use an immersion, ultrasonic wave, or other cleaning method, and the cleaning time should not exceed 2 minutes.
(2) The temperature of the cleaning solution should be less than or equal to 60°C.
(3) Control contamination of cleaning agents (conductivity, pH, specific gravity, water content, etc.).
(4) After cleaning, do not store the product in the atmosphere of the cleaning solution or in an airtight container.
(5) When drying the circuit board or this product, use hot air below the upper limit temperature of their category.
(6) Please be mindful that rubbing the printed surface of this product after cleaning may erase the markings depending on the cleaning agent used.
(7) Please contact us separately for details on cleaning agents, cleaning methods, etc., and for cleaning solutions other than those listed above.

■ Fixing agents and coating agents

(1) Select appropriate materials for the outer packaging and sealing materials of this product. Do not use acetone, especially in fixing agents, coating agents, or diluents.
(2) When using a fixing agent or coating agent, ensure that no flux residue or contamination remains between the circuit board and the sealing area of this product.
(3) Allow cleaning agents, etc. to dry before using fixing agents or coating agents.
(4) Please contact us for thermal curing conditions for fixing agents or coating agents.

■ When the capacitor is used in a circuit where an impact voltage is applied or a high voltage is applied in a short period (transient phenomenon) or a high pulse voltage is applied, make sure to use the capacitor at a voltage equal to or lower than its rated voltage.

Response to anomalies and handling conditions

■ The main failure mode is a short-circuit mode caused mainly by thermal stress, electrical stress, and mechanical stress due to soldering and operating temperature environments. To prevent the occurrence of short circuits, the following measures should be adequately taken to ensure safety.

(1) If odorous gases are generated, then turn off the main power of the set equipment and stop using it. In this case, keep your face and hands away from the equipment.
(2) Depending on conditions, it may take several seconds to several minutes before odorous gases are generated. When using a protection circuit, design it so that it operates during this period.
(3) If odorous gases get into your eyes or are inhaled, immediately wash your eyes with water or gargle.
(4) Do not lick the electrolyte of the product. If the electrolyte gets on your skin, then wash it off with soap.
(5) When a current value after the short of the product is extremely large, the shorted capacitor may spark out, which, in the worst scenario, may result in ignition. Ensure the safety of the circuit by, for example, giving it a redundant circuit structure or providing it with a protective circuit.

Reliability and product life

The failure rate of the capacitor is specified based on 0.5%*/1000 h (reliability level 60%), a failure rate conforming to JIS C 5003 (failure rate level). This indicates that the possibility of occurrence of a failure is by no means zero.
One of the failure modes is a wear out failure. This happens when the period of guaranteeing the durability and high-temperature/high-humidity resistance of the capacitor is over, changes in the electrical characteristics of the capacitor (product) get larger and its electrolyte gradually deteriorates into an insulating material to create an open mode.
Another failure mode is a random failure in which a short mode results mainly because of thermal, electrical, or mechanical stress, etc.

Circuit design and circuit board design

■ Due to reasons such as increased leakage currents, do not use this product in high impedance circuits, coupling circuits, time constant circuits, and circuits that are significantly affected by leakage currents.

■ During circuit design, be mindful that the electrical characteristics of this product, such as capacitance and ESR, may fluctuate within the specified ranges even under conditions that meet the rated electrical and mechanical performance.

■ Leakage currents may increase due to mechanical and thermal stress (soldering, high-temperature no-load test, etc.). However, when the voltage (lower than or equal to the category voltage and upper limit temperature) is applied, leakage currents gradually decrease due to the self-recovery function.

■ If an excessive rush current flows due to rapid charging and discharging, then it may lead to short circuits and increased leakage currents. Therefore, apply a protection circuit to this product if the rush current value flowing through it is as follows.

(1) When a rush current of 10 A or more flows through a product whose tenfold allowable ripple current is less than 10 A.
(2) With regard to a product whose tenfold allowable ripple current is 10 A or more, when a rush current exceeding the tenfold value flows through the product.

■ The resin on the surface of the case does not guarantee insulation. In addition, there is an indefinite resistance between the case and the cathode terminal, and they are not insulated. Therefore, completely isolate the case from the cathode terminal, anode terminal, and circuit pattern.

Mounting and storage conditions

■ Soldering with a soldering iron

(1) Since the lead wire pitch dimension of the radial lead type capacitor and the printed circuit board hole pitch dimension do not match, when processing the lead wires, do not apply stress to the body before soldering.
(2) When soldering, do not apply excessive stress to the body of this product.
(3) Once the product has been soldered, when using a soldering iron to remove it, remove it after the solder has completely melted so as not to apply stress to the electrode terminals of the product.
(4) Do not allow the tip of the soldering iron to touch the body of this product.

■ Flow soldering

(1) Do not apply flow soldering to the surface mount type model of this product.
(2) Do not solder this product by immersing its body in molten solder.
(3) Solder only on the opposite side of the circuit board surface where this product is mounted.
(4) Do not allow flux to adhere to parts other than the electrode terminals.
(5) Do not allow other parts to fall over and come into contact with this product during soldering.

■ Reflow soldering

(1) Do not apply reflow soldering to the radial lead type model of this product.
(2) Please contact us separately for soldering conditions for using the VPS method.

■ Handling after soldering

Observe the following precautions to avoid applying excessive stress on this product.

(1) Do not tilt, knock over, or twist this product.
(2) Do not move the circuit board by grabbing this product.
(3) Do not hit this product with objects.
(4) When stacking circuit boards, do not allow circuit boards or other parts to come in contact with this product.

■ It is recommended that all components in the bag be used up by opening the bag immediately before use. However, if the remaining components are to be stored after opening the bag, please use them up within the following specified period* to maintain good solderability.

* The surface mount type does not comply with the JEDEC J-STD-020 specification.

(1) Surface mount type	: Within 24 months after shipment (before opening) and within 30 days after opening (packaged with carrier tape)
(2) Radial lead type (bagged product)	: Within 30 months after shipment (before opening) and within 7 days after opening
(3) Radial lead type (taped product)	: Within 24 months after shipment (before opening) and within 7 days after opening

Reference information

Intellectual property

Panasonic Group provides customers with safe products and services. We are also making great efforts to protect our intellectual property rights for Panasonic Group products. Typical patents related to this product are as follows.

[U.S. patent]

USP No. 7158367

Line up

SMD type

Series	Features	Small size/Low profile	Large cap.	Low ESR	High voltage	Long life/High reliability	Category tem. range (℃)	Rated voltage range (V)	ESR (mΩ)	Rated capcitance. range (μF)	Size code	Size (mm) øD	Size (mm) L
SVT	Low ESR Large capacitnce 125 ℃ 2000 h		●	●	●	●	-55 to 125	2.5 to 16	15 to 24	100 to 820	C65	6.3	6.4
							-55 to 125	2.5 to 50	20 to 35	18 to 680	E7	8.0	6.9
							-55 to 125	16	18	560	E10	8.0	10.0
							-55 to 125	2.5 to 50	10 to 25	39 to 1500	E12	8.0	11.9
							-55 to 125	16	16	1000	F10	10.0	10.0
							-55 to 125	2.5 to 50	12 to 20	68 to 2700	F12	10.0	12.6
SVPT	Low ESR Large capacitnce 105 ℃ 20000 h		●	●	●	●	-55 to 105	2.5 to 16	15 to 24	100 to 820	C65	6.3	6.4
							-55 to 105	2.5 to 50	20 to 35	18 to 680	E7	8.0	6.9
							-55 to 105	16	18	560	E10	8.0	10.0
							-55 to 105	2.5 to 50	10 to 25	39 to 1500	E12	8.0	11.9
							-55 to 105	16	16	1000	F10	10.0	10.0
							-55 to 105	2.5 to 50	12 to 20	68 to 2700	F12	10.0	12.6
SVF	High voltage Large capacitance 125 ℃ 1000 h		●		●	●	-55 to 125	16 to 25	27 to 40	27 to 82	B6	5.0	5.9
							-55 to 125	16 to 50	22 to 40	10 to 180	C6	6.3	5.9
							-55 to 125	16 to 50	22 to 35	18 to 270	E7	8.0	6.9
							-55 to 125	16 to 50	14 to 25	39 to 560	E12	8.0	11.9
							-55 to 125	16	16	1000	F10	10.0	10.0
							-55 to 125	16 to 50	12 to 20	68 to 1000	F12	10.0	12.6
SVPK	High voltage Large capacitance 125 ℃ 1000 h		●		●	●	-55 to 125	16 to 50	27 to 80	10 to 100	B6	5.0	5.9
							-55 to 125	16 to 50	22 to 35	22 to 220	C6	6.3	5.9
							-55 to 125	16 to 50	22 to 35	33 to 330	E7	8.0	6.9
							-55 to 125	16 to 50	14 to 25	68 to 680	E12	8.0	11.9
							-55 to 125	16 to 50	12 to 20	120 to 1200	F12	10.0	12.6
SXV	Super high voltage 125 ℃ 1000 h				●	●	-55 to 125	63 to 100	60	6.8 to 18	E7	8.0	6.9
							-55 to 125	63 to 100	50 to 60	15 to 39	F8	10.0	7.9
							-55 to 125	63 to 100	25 to 40	15 to 68	E12	8.0	11.9
							-55 to 125	63 to 100	25 to 30	18 to 120	F12	10.0	12.6
SVPG	Low ESR High ripple current 105 ℃ 5000 h			●		●	-55 to 105	16 to 25	25 to 30	15 to 47	B45	5.0	4.4
							-55 to 105	16	15	100	B6	5.0	5.9
							-55 to 105	16 to 25	14 to 18	82 to 220	C6	6.3	5.9
							-55 to 105	16 to 25	10 to 14	120 to 270	C8	6.3	7.9
							-55 to 105	16 to 25	8 to 13	150 to 270	C10	6.3	9.9
							-55 to 105	16	6.5	330	C10L	6.3	10.4
							-55 to 105	16 to 25	16 to 18	120 to 330	E7	8.0	6.9
							-55 to 105	16	10	560	E10	8.0	10.0
							-55 to 105	16 to 25	8 to 12	270 to 680	E12	8.0	11.9
							-55 to 105	16	9	820	F10	10.0	10.0
							-55 to 105	16 to 25	7 to 10	470 to 1200	F12	10.0	12.6
SVPF	High voltage Large capacitance 105 ℃ 5000 h		●		●	●	-55 to 105	16 to 25	27 to 40	27 to 82	B6	5.0	5.9
							-55 to 105	16 to 50	22 to 40	10 to 180	C6	6.3	5.9
							-55 to 105	16 to 50	22 to 35	18 to 270	E7	8.0	6.9
							-55 to 105	16	18	560	E10	8.0	10.0
							-55 to 105	16 to 50	14 to 25	39 to 560	E12	8.0	11.9
							-55 to 105	16	16	1000	F10	10.0	10.0
							-55 to 105	16 to 50	12 to 20	68 to 1000	F12	10.0	12.6
SVPA	Low ESR High ripple current			●			-55 to 105	2.5 to 20	30 to 40	10 to 82	B6	5.0	5.9
							-55 to 105	2.5 to 20	20 to 35	22 to 180	C6	6.3	5.9
							-55 to 105	2.5 to 20	20 to 33	47 to 330	E7	8.0	6.9
							-55 to 105	2.5 to 16	19 to 29	180 to 820	F8	10.0	7.9

Line up

SMD type

Series	Features	Small size/Low profile	Large cap.	Low ESR	High voltage	Long life/High reliability	Category tem. range (℃)	Rated voltage range (V)	ESR (mΩ)	Rated capcitance. range (μF)	Size code	Size (mm) øD	Size (mm) L
NRFND SVPB	Low profile	●					-55 to 105	2.5 to 20	40 to 45	15 to 120	C5	6.3	4.9
							-55 to 105	20	35	22	C55	6.3	5.4
SVPC	Low ESR Large capacitance		●	●			-55 to 105	2.5 to 16	19 to 35	39 to 180	B6	5.0	5.9
							-55 to 105	2.5 to 16	15 to 30	68 to 560	C6	6.3	5.9
							-55 to 105	2.5 to 16	19 to 27	120 to 680	E7	8.0	6.9
							-55 to 105	2.5 to 16	9 to 16	270 to 1500	E12	8.0	11.9
							-55 to 105	2.5	12	2700	F12	10.0	12.6
SVPD	Guaranteed at 125℃ High voltage 85 ℃ 85 % RH				●	●	-55 to 125	10 to 25	45 to 65	10 to 56	C6	6.3	5.9
							-55 to 125	16 to 35	40 to 70	8.2 to 82	E7	8.0	6.9
							-55 to 125	25 to 35	45 to 60	18 to 39	F8	10.0	7.9
							-55 to 125	25 to 35	30 to 50	22 to 47	E12	8.0	11.9
							-55 to 125	25 to 35	28 to 30	47 to 82	F12	10.0	12.6
SVPE	Low ESR Large capacitance		●	●			-55 to 105	2.5 to 6.3	10 to 15	150 to 390	B6	5.0	5.9
							-55 to 105	2.5 to 10	10 to 20	220 to 820	C6	6.3	5.9
							-55 to 105	2.0 to 16	8 to 11	180 to 1200	C10	6.3	9.9
							-55 to 105	16	10	470	F12	10.0	12.6
SVPS	Long life					●	-55 to 105	4.0 to 10	200 to 220	10 to 33	A5	4.0	5.4
							-55 to 105	4.0 to 16	30 to 90	22 to 68	B6	5.0	5.9
							-55 to 105	4.0 to 20	22 to 60	22 to 150	C6	6.3	5.9
							-55 to 105	4.0 to 25	22 to 60	10 to 270	E7	8.0	6.9
							-55 to 105	4.0 to 16	20 to 35	100 to 680	F8	10.0	7.9
SVQP	Guaranteed at 125 ℃					●	-55 to 105	4.0 to 20	40 to 60	22 to 150	C6	6.3	5.9
							-55 to 105	6.3 to 20	35 to 45	47 to 220	E7	8.0	6.9
SVP	Standard						-55 to 105	4.0 to 16	200 to 260	3.3 to 33	A5	4.0	5.4
							-55 to 105	4.0 to 20	60 to 120	10 to 68	B6	5.0	5.9
							-55 to 105	2.5 to 20	23 to 60	22 to 220	C6	6.3	5.9
							-55 to 105	4.0 to 20	35 to 45	33 to 330	E7	8.0	6.9
							-55 to 105	4.0 to 20	25 to 40	56 to 680	F8	10.0	7.9
							-55 to 105	2.5 to 20	13 to 24	100 to 680	E12	8.0	11.9
							-55 to 105	2.5 to 20	12 to 20	150 to 1500	F12	10.0	12.6

NRFND Not recommended for new design

Line up

Radial lead type

Series	Features	Small size/Low profile	Large cap.	Low ESR	High voltage	Long life/High reliability	Category tem. range (℃)	Rated voltage range (V)	ESR (mΩ)	Rated capcitance. range (μF)	Size code	Size (mm) øD	Size (mm) L
SEF	High voltage Large capacitance 125 ℃ 1000 h		●		●	●	-55 to 125	16 to 35	22 to 35	22 to 180	C6	6.3	5.9
							-55 to 125	16 to 35	22 to 30	39 to 270	E7	8.0	6.9
							-55 to 125	16 to 35	14 to 20	82 to 560	E12	8.0	11.9
							-55 to 125	16 to 5	12 to 18	120 to 1000	F13	8.0	12.9
SEK	High voltage Large capacitance 125 ℃ 1000 h		●		●	●	-55 to 125	25 to 50	25 to 35	22 to 82	C6	6.3	5.9
							-55 to 125	25 to 50	24 to 35	33 to 120	E7	8.0	6.9
							-55 to 125	25 to 50	16 to 25	68 to 270	E12	8.0	11.9
							-55 to 125	25 to 50	14 to 20	120 to 470	F13	8.0	12.9
SEPG	Low ESR High ripple current 105 ℃ 5000 h			●		●	-55 to 105	16	12	150	B9	5.0	8.9
							-55 to 105	16	10	270	C9	10.0	8.9
							-55 to 105	16	8	270	C10	6.3	9.9
							-55 to 105	16	8	470	E9	8.0	8.9
							-55 to 105	16	8	560	E13	8.0	12.9
SXE	Super high voltage 125 ℃ 1000 h				●	●	-55 to 125	63 to 100	60	6.8 to 18	E7	8.0	6.9
							-55 to 125	63 to 100	50 to 60	15 to 39	F8	8.0	7.9
							-55 to 125	63 to 100	25 to 40	15 to 68	E12	8.0	11.9
							-55 to 125	63 to 100	25 to 30	18 to 120	F13	8.0	12.9
SEPF	Small size Low profile High voltage Large capacitance 105 ℃ 5000 h	●	●		●	●	-55 to 105	16 to 32	30 to 35	22 to 150	C55	6.3	5.4
							-55 to 105	16 to 35	22 to 35	22 to 180	C6	6.3	5.9
							-55 to 105	16 to 35	22 to 30	39 to 270	E7	8.0	6.9
							-55 to 105	16 to 35	14 to 20	82 to 560	E12	8.0	11.9
							-55 to 105	16 to 35	12 to 18	120 to 1000	F13	10.0	12.9
SEPC	Super low ESR Large capacitance Small size Low profile 105 ℃ 5000 h	●	●	●		●	-55 to 105	2.5	7	100 to 560	B9	5.0	8.9
							-55 to 105	6.3	18	220	C55	6.3	5.4
							-55 to 105	2.5 to 16	10 to 24	100 to 560	C6	6.3	5.9
							-55 to 105	2.5 to 16	7 to 10	100 to 820	C9	6.3	8.9
							-55 to 105	2.5 to 16	8 to 22	150 to 1000	E7	8.0	6.9
							-55 to 105	2.5 to 16	5 to 10	180 to 1000	E9	8.0	8.9
							-55 to 105	16	11 to 16	180 to 270	E12	8.0	11.9
							-55 to 105	2.5 to 6.3	7 to 8	470 to 820	E13	8.0	12.9
							-55 to 105	2.5 to 16	7 to 10	470 to 2700	F13	10.0	12.9
SEQP	105 ℃ 5000 h Guaranteed at 125 ℃ Rated 32 V max.				●	●	-55 to 125	4.0 to 20	40 to 60	22 to 150	C6	6.3	5.9
							-55 to 125	4.0 to 32	35 to 100	6.8 to 330	E7	8.0	6.9
							-55 to 125	4.0 to 32	25 to 80	15 to 680	F8	10.0	7.9
							-55 to 125	4.0 to 32	13 to 50	18 to 560	E12	8.0	11.9
							-55 to 125	4.0 to 20	12 to 20	150 to 1200	F13	10.0	12.9
SEP	Standard				●	●	-55 to 105	4.0 to 20	40 to 60	22 to 150	C6	6.3	5.9
							-55 to 105	4.0 to 20	35 to 45	33 to 330	E7	8.0	6.9
							-55 to 105	4.0 to 20	25 to 40	56 to 680	F8	10.0	7.9
							-55 to 105	2.5 to 20	13 to 24	100 to 680	E12	8.0	11.9
							-55 to 105	2.5 to 20	12 to 20	150 to 1500	F12	10.0	12.9

Series flow chart

● SMD type

SVP
Standard

- **A5 size** 4.0 to 16 V 3.3 to 33 µF
- **B6 size** 4.0 to 20 V 10 to 68 µF
- **C6 size** 2.5 to 20 V 22 to 220 µF
- **E7 size** 4.0 to 20 V 33 to 330 µF
- **E12 size** 2.5 to 20 V 100 to 680 µF
- **F8 size** 4.0 to 20 V 56 to 680 µF
- **F12 size** 2.5 to 20 V 150 to 1500 µF

SVPA
Low ESR
High ripple current

- **B6 size** 2.5 to 20 V 10 to 82 µF
- **C6 size** 2.5 to 20 V 22 to 180 µF
- **E7 size** 2.5 to 20 V 47 to 330 µF
- **F8 size** 2.5 to 16 V 180 to 820 µF

SVPB
NRFND

Low profile

- **C5 size** 2.5 to 20 V 15 to 120 µF
- **C55 size** 20 V 22 µF

SVPC
Large capacitance
Low ESR

- **B6 size** 2.5 to 16 V 39 to 180 µF
- **C6 size** 2.5 to 16 V 68 to 560 µF
- **E7 size** 2.5 to 16 V 120 to 680 µF
- **E12 size** 2.5 to 16 V 270 to 1500 µF
- **F12 size** 2.5 V 2700 µF

SVPF
105°C 5000h
High voltage
Large capacitance

- **B6 size** 16 to 25 V 27 to 82 µF
- **C6 size** 16 to 50 V 10 to 180 µF
- **E7 size** 16 to 50 V 18 to 270 µF
- **E10 size** 16 V 560 µF
- **E12 size** 16 to 50 V 39 to 560 µF
- **F10 size** 16 V 1000 µF
- **F12 size** 16 to 50 V 68 to 1000 µF

SVPE
Large capacitance
Low ESR

- **B6 size** 2.5 to 6.3 V 150 to 390 µF
- **C6 size** 2.5 to 10 V 220 to 820 µF
- **C10 size** 2.5 to 16 V 180 to 1200 µF
- **F12 size** 16 V 470 µF

SVPS
Long life

- **A5 size** 4.0 to 10 V 10 to 33 µF
- **B6 size** 4.0 to 16 V 22 to 68 µF
- **C6 size** 4.0 to 20 V 22 to 150 µF
- **E7 size** 4.0 to 25 V 10 to 270 µF
- **F8 size** 4.0 to 16 V 100 to 680 µF

SVQP
Guaranteed at 125°C

- **C6 size** 4.0 to 20 V 22 to 150 µF
- **E7 size** 6.3 to 20 V 47 to 270 µF

SVPD
125℃ 1000h
High voltage

- **C6 size** 10 to 25 V 10 to 56 µF
- **E7 size** 16 to 35 V 8.2 to 82 µF
- **E12 size** 25 to 35 V 22 to 47 µF
- **F8 size** 25 to 35 V 18 to 39 µF
- **F12 size** 25 to 35 V 47 to 82 µF

SXV
125°C 1000h
Super high voltage

- **E7 size** 63 to 100 V 6.8 to 18 µF
- **E12 size** 63 to 100 V 15 to 68 µF
- **F8 size** 63 to 100 V 15 to 39 µF
- **F12 size** 63 to 100 V 18 to 120 µF

NRFND Not recommended for new design

SVPG
Low ESR
High ripple current

- **B45 size** 16 to 25 V 15 to 47 µF
- **B6 size** 16 V 100 µF
- **C6 size** 16 to 25 V 82 to 220 µF
- **C8 size** 16 to 25 V 120 to 270 µF
- **C10 size** 16 to 25 V 150 to 270 µF
- **C10L size** 16 V 330 µF
- **E7 size** 16 to 25 V 120 to 330 µF
- **E10 size** 16 V 560 µF
- **E12 size** 16 to 25 V 270 to 680 µF
- **F10 size** 16 V 820 µF
- **F12 size** 16 to 25 V 470 to 1200 µF

SVF
125°C 1000h
High voltage
Large capacitance

- **B6 size** 16 to 25 V 27 to 82 µF
- **C6 size** 16 to 50 V 10 to 180 µF
- **E7 size** 16 to 50 V 18 to 270 µF
- **E12 size** 16 to 50 V 39 to 560 µF
- **F10 size** 16 V 1000 µF
- **F12 size** 16 to 50 V 68 to 1000 µF

SVPK
125°C 1000h
High voltage
Large capacitance

- **B6 size** 16 to 50 V 10 to 100 µF
- **C6 size** 16 to 50 V 22 to 220 µF
- **E7 size** 16 to 50 V 33 to 330 µF
- **E12 size** 16 to 50 V 68 to 680 µF
- **F12 size** 16 to 50 V 120 to 1200 µF

SVPT
105°C 20000h
Low ESR
Large capacitance

- **C65 size** 2.5 to 16 V 100 to 820 µF
- **E7 size** 2.5 to 50 V 18 to 680 µF
- **E10 size** 16 V 560 µF
- **E12 size** 2.5 to 50 V 39 to 1500 µF
- **F10 size** 16 V 1000 µF
- **F12 size** 2.5 to 50 V 68 to 2700 µF

SVT
125°C 2000h
Low ESR
Large capacitance

- **C65 size** 2.5 to 16 V 100 to 820 µF
- **E7 size** 2.5 to 50 V 18 to 680 µF
- **E10 size** 16 V 560 µF
- **E12 size** 2.5 to 50 V 39 to 1500 µF
- **F10 size** 16 V 1000 µF
- **F12 size** 2.5 to 50 V 68 to 2700 µF

Series flow chart

● Radial lead type

SEP
Standard

- **C6 size** 4.0 to 20 V 3.3 to 33 µF
- **E7 size** 4.0 to 20 V 33 to 330 µF
- **E12 size** 2.5 to 20 V 100 to 680 µF
- **F8 size** 4.0 to 20 V 56 to 680 µF
- **F13 size** 2.5 to 20 V 150 to 1500 µF

SEPC
105°C 5000h
Super low ESR
Large capacitance

- **B9 size** 2.5 V 100 to 560 µF
- **C55 size** 6.3 V 220 µF
- **C6 size** 2.5 to 16 V 100 to 560 µF
- **C9 size** 2.5 to 16 V 100 to 820 µF
- **E7 size** 6.3 to 16 V 150 to 1000 µF
- **E9 size** 2.5 to 16 V 180 to 1000 µF
- **E12 size** 16 V 180 to 270 µF
- **E13 size** 2.5 to 6.3 V 470 to 820 µF
- **F13 size** 2.5 to 6.3 V 470 to 2700 µF

SEPF
105°C 5000h
High voltage
Large capacitance

- **C55 size** 16 to 32 V 22 to 150 µF
- **C6 size** 16 to 35 V 22 to 180 µF
- **E7 size** 16 to 35 V 39 to 270 µF
- **E12 size** 16 to 35 V 82 to 560 µF
- **F13 size** 16 to 35 V 120 to 1000 µF

SEF
125°C 1000h
High voltage
Large capacitance

- **C6 size** 16 to 35 V 22 to 180 µF
- **E7 size** 16 to 35 V 39 to 270 µF
- **E12 size** 16 to 35 V 82 to 560 µF
- **F8 size** 16 to 35 V 120 to 1000 µF

SEPG
105°C 50000h
Low ESR
High ripple current

- **B9 size** 16 V 150 µF
- **C9 size** 16 V 270 µF
- **C10 size** 16 V 270 µF
- **E9 size** 16 V 470 µF
- **E13 size** 16 V 560 µF

SEK
125°C 1000h
High voltage
Large capacitance

- **C6 size** 25 to 50 V 22 to 82 µF
- **E7 size** 25 to 50 V 33 to 120 µF
- **E12 size** 25 to 50 V 68 to 270 µF
- **F8 size** 25 to 50 V 120 to 470 µF

SEQP
105°C 5000h
Guaranteed at 125°C
High voltage

- **C6 size** 4.0 to 20 V 22 to 150 µF
- **E7 size** 4.0 to 32 V 6.8 to 330 µF
- **E12 size** 4.0 to 32 V 18 to 560 µF
- **F8 size** 4.0 to 32 V 15 to 680 µF
- **F13 size** 4.0 to 20 V 150 to 1200 µF

SXE
125°C 1000h
Super high voltage

- **E7 size** 63 to 100 V 6.8 to 18 µF
- **E12 size** 63 to 100 V 15 to 68 µF
- **F8 size** 63 to 100 V 15 to 39 µF
- **F13 size** 63 to 100 V 18 to 120 µF

Voltage - Capacitance table (SMD type) (Vol. : 2.0 to 16 V / Cap. : 3.3 to 33 μF)

Series [Size]
(ESR mΩ)

V \ μF	3.3	4.7	6.8	8.2	10	12	15	18	22	27	33
2.0											
2.5											
4.0									SVPS [A5] (200)		
									SVP [A5] (200)		
6.3									SVPS [A5] (200)		
									SVP [A5] (200)		
10		SVP [A5] (240)	SVP [A5] (240)		SVPS [A5] (220)		SVPS [A5] (200)				SVPS [B6] (70)
					SVP [A5] (220)		SVP [A5] (200)				SVP [B6] (70)
16	SVP [A5] (260)						SVP [B6] (120)		SVPS [B6] (90)		
									SVP [B6] (90)		

Size list ø x L (mm)

A5	4.0x5.4	B45	5.0x4.4	C6	6.3x5.9	C8	6.3x7.9	E7	8.0x6.9	F8	10.0x7.9
		B6	5.0x5.9	C65	6.3x6.4	C10	6.3x9.9	E10	8.0x10.0	F10	10.0x10.0
						C10L	6.3x10.4	E12	8.0x11.9	F12	10.0x12.6

Voltage - Capacitance table (SMD type) (Vol. : 2.0 to 16 V / Cap. : 39 to 270 μF)

Series [Size]
(ESR mΩ)

V \ μF	39	47	56	68	82	100	120	150	180	220	270
2.0											
2.5					SVPA [B6] (30)				SVPA [C6] (20)	SVP [C6] (23)	SVPE [B6] (10)
									SVPC [B6] (30,24,19)		
4.0	SVP [B6] (70)			SVPA [B6] (30)				SVPA [C6] (22)			SVPA [E7] (22)
				SVPS [B6] (30)				SVPC [B6] (30,23,20)			SVPS [E7] (22)
				SVP [B6] (60)				SVPS [C6] (22)			
								SVQP [C6] (40)			
								SVP [C6] (40)			
6.3		SVPA [B6] (30)			SVQP [C6] (45)	SVPC [B6] (30,25)	SVPA [C6] (22)	SVPE [B6] (12)		SVPA [E7] (22)	
		SVPS [B6] (30)			SVP [C6] (45)	SVQP [C6] (40)	SVPC [B6] (21)			SVPC [C6] (27,15)	
		SVP [B6] (70)				SVP [C6] (40)	SVPS [C6] (22)			SVPE [B6] (15)	
							SVP [C6] (17)			SVPE [C6] (10)	
										SVPS [E7] (22)	
										SVQP [E7] (35)	
										SVP [E7] (35)	
										SVP [F8] (25)	
10		SVP [C6] (50)	SVPD [C6] (45)	SVPA [C6] (30)			SVPC [C6] (27,22)	SVPA [E7] (30)		SVPE [C6] (20)	SVPC [E7] (22)
			SVQP [C6] (45)	SVPC [B6] (30,23)			SVQP [E7] (35)	SVPS [E7] (30)			SVP [F8] (25)
			SVP [C6] (45)	SVPS [C6] (30)			SVP [E7] (35)	SVPS [F8] (30)			
								SVQP [E7] (35)			
								SVP [E7] (35)			
								SVP [F8] (30)			
16	SVPA [C6] (35,24)	SVPG [B45] (25)	SVP [E7] (45)	SVPC [C6] (30,25)	SVPA [E7] (30)	SVT [C65] (24)	SVPC [E7] (27)	SVPC [E7] (22)	SVPA [F8] (29)	SVPG [C6] (14)	SVT [E7] (22)
	SVPC [B6] (35,27)				SVPD [E7] (40)	SVPT [C65] (24)		SVP [F8] (30)	SVPE [C10] (11)	SVPK [C6] (22)	SVPT [E7] (22)
	SVPS [C6] (24)				SVPF [B6] (24)	SVPC [C6] (24)			SVPF [C6] (22)		SVPC [E12] (16)
	SVQP [C6] (50)				SVPS [E7] (30)	SVPG [B6] (15)			SVPS [F8] (29)		SVPF [E7] (22)
	SVP [C6] (50)				SVQP [E7] (40)	SVPK [B6] (27)			SVP [F8] (30)		SVPG [C8] (10)
					SVP [E7] (40)	SVPS [F8] (35)			SVP [E12] (20)		SVPG [C10] (8)
					SVF [B6] (25)	SVP [F8] (35)			SVF [C6] (22)		SVF [E7] (22)

Size list ø x L (mm)

A5	4.0x5.4	B45	5.0x4.4	C6	6.3x5.9	C8	6.3x7.9	E7	8.0x6.9	F8	10.0x7.9
		B6	5.0x5.9	C65	6.3x6.4	C10	6.3x9.9	E10	8.0x10.0	F10	10.0x10.0
						C10L	6.3x10.4	E12	8.0x11.9	F12	10.0x12.6

Voltage - Capacitance table (SMD type) (Vol. : 2.0 to 16 V / Cap. : 330 to 2700 µF)

Series [Size]
(ESR mΩ)

V \ µF	330	390	470	560	680	820	1000	1200	1500	2700
2.0								SVPE [C10] (8)		
2.5	SVPA [E7] (20)	SVPC [C6] (25,15)		SVT [C65] (16)	SVT [C65] (16)	SVPA [F8] (19)			SVT [E12] (10)	SVT [F12] (12)
	SVPE [B6] (15,10)	SVPE [B6] (10)		SVPT [C65] (16)	SVT [E7] (20)	SVPC [E12] (9)			SVPT [E12] (10)	SVPT [F12] (12)
		SVPE [C6] (10)		SVPC [C6] (16)	SVPT [C65] (16)	SVT [C65] (16)			SVPC [E12] (10)	SVPC [F12] (12)
					SVPT [E7] (20)	SVPT [C65] (16)			SVP [F12] (12)	
					SVPC [E7] (20)					
					SVP [E12] (13)					
4.0	SVPC [C6] (27,21,15)			SVT [E7] (22)	SVPA [F8] (20)			SVPC [E12] (12)	SVT [E12] (12)	
	SVP [E7] (35)			SVPT [E7] (22)	SVPS [F8] (20)			SVP [F12] (12)	SVPT [E12] (12)	
				SVPC [E7] (22)	SVP [F8] (25)				SVPC [E12] (12)	
				SVPC [E12] (9)						
				SVP [E12] (13)						
6.3	SVT [C65] (15)	SVT [E7] (22)	SVPA [F8] (20)			SVT [E12] (12)				
	SVPT [C65] (15)	SVPT [E7] (22)	SVPS [F8] (20)			SVPT [E12] (12)				
	SVPC [C6] (17)	SVPC [E7] (22)	SVP [E12] (15)			SVPC [E12] (12)				
	SVP [F8] (25)		SVP [F8] (25)			SVP [F12] (12)				
10	SVPA [F8] (24)			SVP [F12] (13)						
	SVPC [E7] (19)									
	SVPS [F8] (24)									
	SVP [E12] (17)									
	SVP [F8] (25)									
16	SVPG [C10L] (6.5)		SVPE [F12] (10)	SVT [E10] (18)	SVPG [E12] (8)	SVPG [F10] (9)	SVT [F10] (18)	SVPG [F12] (7)		
	SVPG [E7] (16)			SVT [E12] (14)	SVPK [E12] (14)		SVT [F12] (12)	SVPK [F12] (12)		
	SVPK [E7] (22)			SVPT [E10] (16)			SVPT [F10] (16)			
	SVP [F12] (16)			SVPT [E12] (14)			SVPT [F12] (12)			
				SVPF [E10] (18)			SVPF [F10] (16)			
				SVPF [E12] (14)			SVPF [F12] (12)			
				SVPG [E10] (10)			SVF [F10] (16)			
				SVF [E12] (14)			SVF [F12] (12)			

Size list ø x L (mm)

A5	4.0x5.4	B45	5.0x4.4	C6	6.3x5.9	C8	6.3x7.9	E7	8.0x6.9	F8	10.0x7.9
		B6	5.0x5.9	C65	6.3x6.4	C10	6.3x9.9	E10	8.0x10.0	F10	10.0x10.0
						C10L	6.3x10.4	E12	8.0x11.9	F12	10.0x12.6

Voltage - Capacitance table (SMD type) (Vol. : 20 to 100 V / Cap. : 3.3 to 33 μF)

Series [Size]
(ESR mΩ)

V \ μF	3.3	4.7	6.8	8.2	10	12	15	18	22	27	33
20					SVPA [B6] (40)				SVPA [C6] (35)	SVP [C6] (60)	SVPG [B45] (27)
					SVP [B6] (120)				SVPS [C6] (60)		SVP [E7] (45)
									SVQP [C6] (60)		
									SVP [C6] (60)		
25					SVPD [C6] (65)				SVPD [E7] (48)	SVPF [B6] (40)	SVPK [B6] (35)
					SVPS [E7] (60)					SVF [B6] (40)	
35								SVPD [F8] (60)	SVPD [E12] (50)		
									SVPF [C6] (35)		
									SVF [C6] (35)		
									SVPK [B6] (35)		
50					SVPF [C6] (40)			SVT [E7] (35)	SVPK [C6] (35)		SVPK [E7] (35)
					SVF [C6] (40)			SVPT [E7] (35)			
					SVPK [B6] (80)			SVPF [E7] (35)			
								SVF [E7] (35)			
63								SXV [E7] (60)			SXV [E12] (25)
72											
80						SXV [E7] (60)				SXV [E12] (35)	SXV [E12] (35)
										SXV [F8] (55)	
100			SXV [E7] (60)				SXV [E12] (40)	SXV [E12] (40)	SXV [F12] (30)	SXV [E12] (40)	
							SXV [F8] (60)	SXV [F12] (30)		SXV [F12] (30)	

Size list ø x L (mm)

A5	4.0x5.4	B45	5.0x4.4	C6	6.3x5.9	C8	6.3x7.9	E7	8.0x6.9	F8	10.0x7.9
		B6	5.0x5.9	C65	6.3x6.4	C10	6.3x9.9	E10	8.0x10.0	F10	10.0x10.0
						C10L	6.3x10.4	E12	8.0x11.9	F12	10.0x12.6

Voltage - Capacitance table (SMD type) (Vol. : 20 to 100 V / Cap. : 39 to 270 µF)

Series [Size]
(ESR mΩ)

V \ µF	39	47	56	68	82	100	120	150	180	220	270
20		SVPA [E7] (33)	SVPF [B6] (30)	SVPK [B6] (30)		SVP [E12] (24)	SVPF [C6] (25)	SVPK [C6] (25)	SVT [E7] (25)	SVPK [E7] (25)	
		SVPS [E7] (45)	SVP [F8] (40)	SVP [F8] (40)			SVF [C6] (25)	SVP [F12] (20)	SVPT [E7] (25)	SVPG [E7] (18)	
		SVQP [E7] (45)	SVF [B6] (30)				SVPG [C6] (18)		SVPF [E7] (25)		
		SVP [E7] (45)							SVF [E7] (25)		
									SVPG [C8] (14)		
									SVPG [C10] (11)		
25	SVPD [F8] (45)	SVPD [E12] (30)	SVPF [C6] (30)		SVPD [F12] (28)	SVT [E7] (24)	SVPK [E7] (24)	SVPG [C10] (13)	SVT [E12] (16)		SVPK [E12] (16)
		SVPF [C6] (30)	SVF [C6] (30)		SVPF [E7] (28)	SVPT [E7] (24)	SVPG [C8] (15)		SVPT [E12] (16)		SVPG [E12] (12)
		SVF [C6] (30)			SVPK [C6] (25)	SVPF [E7] (24)	SVPG [E7] (17)		SVPF [E12] (16)		
					SVF [E7] (28)	SVF [E7] (24)			SVF [E12] (16)		
					SVPG [C6] (18)						
35	SVT [E7] (30)	SVPD [F12] (30)			SVT [E12] (20)		SVT [F12] (18)		SVPK [E12] (20)		
	SVPT [E7] (30)	SVPK [C6] (27)			SVPT [E12] (20)		SVPT [F12] (18)				
	SVPF [E7] (30)				SVPF [E12] (20)		SVPF [F12] (18)				
	SVF [E7] (30)				SVF [E12] (20)		SVF [F12] (18)				
					SVPK [E7] (25)						
50	SVT [E12] (25)			SVT [F12] (20)			SVPK [F12] (20)				
	SVPT [E12] (25)			SVPT [F12] (20)							
	SVPF [E12] (25)			SVPF [F12] (20)							
	SVF [E12] (25)			SVF [F12] (20)							
				SVPK [E12] (25)							
63	SXV [E12] (25)		SXV [E12] (25)	SXV [E12] (25)		SXV [F12] (25)	SXV [F12] (25)				
	SXV [F8] (50)			SXV [F12] (25)							
72					SXV [F12] (28)	SXV [F12] (28)					
80		SXV [E12] (35)	SXV [E12] (28)								
		SXV [F12] (28)	SXV [F12] (28)								
100	SXV [F12] (30)										

Size list ø x L (mm)

A5	4.0x5.4	B45	5.0x4.4	C6	6.3x5.9	C8	6.3x7.9	E7	8.0x6.9	F8	10.0x7.9
		B6	5.0x5.9	C65	6.3x6.4	C10	6.3x9.9	E10	8.0x10.0	F10	10.0x10.0
						C10L	6.3x10.4	E12	8.0x11.9	F12	10.0x12.6

Voltage - Capacitance table (SMD type) (Vol. : 20 to 100 V / Cap. : 330 to 2700 μF)

Series [Size]
(ESR mΩ)

V \ μF	330	390	470	560	680	820	1000	1200	1500	2700
20		SVT [E12] (14)	SVPK [E12] (14)	SVT [F12] (12)	SVPK [F12] (12)					
		SVPT [E12] (14)	SVPG [E12] (10)	SVPT [F12] (12)	SVPG [F12] (9)					
		SVPF [E12] (14)		SVPF [F12] (12)						
		SVF [E12] (14)		SVF [F12] (12)						
25	SVT [F12] (14)		SVPK [F12] (14)							
	SVPT [F12] (14)		SVPG [F12] (10)							
	SVPF [F12] (14)									
	SVF [F12] (14)									
35	SVPK [F12] (18)									
50										
63										
72										
80										
100										

Size list ø x L (mm)

A5	4.0x5.4	B45	5.0x4.4	C6	6.3x5.9	C8	6.3x7.9	E7	8.0x6.9	F8	10.0x7.9
		B6	5.0x5.9	C65	6.3x6.4	C10	6.3x9.9	E10	8.0x10.0	F10	10.0x10.0
						C10L	6.3x10.4	E12	8.0x11.9	F12	10.0x12.6

Voltage - Capacitance table (Radial lead type) (Vol. : 2.5 to 16 V / Cap. : 6.8 to 68 μF)

Series [Size]
(ESR mΩ)

V \ μF	6.8	12	15	18	22	27	33	39	47	56	68
2.5											
4.0											
6.3											
10										SEQP [C6] (45)	
										SEP [C6] (45)	
16								SEQP [C6] (50)			
								SEP [C6] (50)			

Size list ø x L (mm)

B9	5.0x8.9	C55	6.3x5.4	E7	8.0x6.9	F8	10.0x7.9
		C6	6.3x5.9	E9	8.0x8.9	F13	10.0x12.9
		C9	6.3x8.9	E12	8.0x11.9		
		C10	6.3x9.9	E13	8.0x12.9		

Voltage - Capacitance table (Radial lead type) (Vol. : 2.5 to 16 V / Cap. : 82 to 560 µF)

Series [Size]
(ESR mΩ)

V \ µF	82	100	120	150	180	220	270	330	390	470	560
2.5		SEPC [B9] (7)						SEPC [B9] (7)	SEPC [C6] (10)	SEPC [B9] (7)	SEPC [B9] (7)
											SEPC [C6] (10)
											SEPC [C9] (7)
											SEPC [E9] (8)
4.0		SEP [C6] (40)		SEQP [C6] (35)		SEP [E7] (35)		SEQP [E7] (35)		SEP [F7] (25)	SEPC [C9] (7)
				SEP [E7] (35)				SEP [E7] (35)			SEPC [E9] (7)
											SEPC [E13] (7)
											SEQP [E12] (13)
											SEP [E12] (13)
6.3	SEQP [C6] (45)			SEQP [E7] (40)		SEPC [C55] (18)		SEQP [F8] (25)		SEPC [C9] (7)	SEPC [C9] (7)
	SEP [C6] (45)			SEP [E7] (40)				SEP [F8] (25)		SEPC [E9] (8)	SEPC [E9] (7)
										SEPC [E13] (8)	
										SEQP [E12] (15)	
										SEP [E12] (15)	
10			SEQP [E7] (35)				SEPC [E7] (22)	SEQP [E12] (17)			SEQP [F13] (13)
			SEP [E7] (35)				SEQP [F8] (25)	SEP [E12] (17)			SEP [F13] (13)
							SEP [F8] (25)				
16	SEQP [E7] (40)	SEPC [C6] (24)		SEPC [E7] (22)	SEF [C6] (22)	SEPC [E7] (13)	SEF [E7] (22)	SEQP [F13] (16)		SEPG [E9] (8)	SEF [E12] (14)
	SEP [E7] (40)	SEPC [C9] (10)		SEPG [B9] (12)	SEPC [E9] (10)		SEPG [C9] (10)	SEP [F13] (16)		SEPC [F13] (10)	SEPG [E13] (8)
				SEPF [C55] (30)	SEPC [E12] (16)		SEPG [C10] (8)				SEPF [E12] (14)
				SEQP [F8] (30)	SEPF [C6] (22)		SEPC [E9] (10)				
				SEP [F8] (30)	SEQP [E12] (20)		SEPC [E12] (11)				
					SEP [E12] (20)		SEPF [E7] (22)				

Size list ø x L (mm)

B9	5.0x8.9	C55	6.3x5.4	E7	8.0x6.9	F8	10.0x7.9
		C6	6.3x5.9	E9	8.0x8.9	F13	10.0x12.9
		C9	6.3x8.9	E12	8.0x11.9		
		C10	6.3x9.9	E13	8.0x12.9		

Voltage - Capacitance table (Radial lead type) (Vol. : 2.5 to 16 V / Cap. : 680 to 2700 μF)

Series [Size]
(ESR mΩ)

V \ μF	680	820	1000	1200	1500	2700
2.5	SEP [E12] (13)	SEPC [C9] (7)	SEPC [E9] (7)		SEP [F13] (12)	SEPC [F13] (10)
		SEPC [E7] (8)				
		SEPC [E9] (5,7)				
		SEPC [E13] (7)				
4.0	SEPC [E13] (7)	SEPC [F13] (7)		SEQP [F13] (12)		
	SEQP [F8] (25)			SEP [F13] (12)		
	SEP [F8] (25)					
6.3	SEPC [F13] (7)	SEQP [F13] (12)	SEPC [E7] (18)		SEPC [F13] (10)	
		SEP [F13] (12)				
10						
16			SEF [F13] (12)			
			SEPF [F13] (12)			

Size list ø x L (mm)

B9	5.0x8.9	C55	6.3x5.4	E7	8.0x6.9	F8	10.0x7.9
		C6	6.3x5.9	E9	8.0x8.9	F13	10.0x12.9
		C9	6.3x8.9	E12	8.0x11.9		
		C10	6.3x9.9	E13	8.0x12.9		

Voltage - Capacitance table (Radial lead type) (Vol. : 20 to 100 V / Cap. : 6.8 to 68 µF)

Series [Size]
(ESR mΩ)

V \ µF	6.8	12	15	18	22	27	33	39	47	56	68
20					SEQP [C6] (60)		SEP [E7] (45)		SEQP [E7] (45)	SEP [F8] (40)	SEQP [F8] (40)
					SEP [C6] (60)				SEP [E7] (45)		SEP [F8] (40)
25										SEF [C6] (30)	
										SEPF [C6] (30)	
32	SEQP [E7] (100)		SEQP [F8] (80)	SEQP [E12] (50)	SEPF [C55] (35)						SEF [E7] (25)
											SEPF [E7] (25)
35					SEF [C6] (35)			SEF [E7] (30)	SEK [C6] (27)		
					SEPF [C6] (35)			SEPF [E7] (30)			
50					SEK [C6] (35)		SEK [E7] (35)				SEK [E12] (25)
63				SXE [E7] (60)			SXE [E12] (25)	SXE [E12] (25)		SXE [E12] (25)	SXE [E12] (25)
											SXE [F13] (25)
72											
80		SXE [E7] (60)				SXE [E12] (35)	SXE [E12] (35)		SXE [E12] (35)	SXE [F13] (28)	
									SXE [F13] (28)		
100	SXE [E7] (60)		SXE [E12] (40)	SXE [E12] (40)	SXE [F13] (30)	SXE [E12] (40)		SXE [F13] (30)			
				SXE [F13] (30)		SXE [F13] (30)					

Size list ø x L (mm)

B9	5.0x8.9	C55	6.3x5.4	E7	8.0x6.9	F8	10.0x7.9
		C6	6.3x5.9	E9	8.0x8.9	F13	10.0x12.9
		C9	6.3x8.9	E12	8.0x11.9		
		C10	6.3x9.9	E13	8.0x12.9		

Voltage - Capacitance table (Radial lead type) (Vol. : 20 to 80 V / Cap. : 82 to 560 μF)

Series [Size]
(ESR mΩ)

V \ μF	82	100	120	150	180	220	270	330	390	470	560
20		SEQP [E12] (24)	SEF [C6] (25)	SEQP [F13] (20)	SEF [E7] (25)				SEF [E12] (24)		SEF [F13] (12)
		SEP [E12] (24)	SEPF [C6] (25)	SEP [F13] (20)	SEPF [E7] (25)				SEPF [E12] (24)		SEPF [F13] (12)
		SEP [F8] (35)									
25	SEK [C6] (25)		SEK [E7] (24)		SEF [E12] (16)		SEK [E12] (16)	SEF [F13] (14)		SEK [F13] (14)	
	SEF [E7] (28)				SEPF [E12] (16)			SEPF [F13] (14)			
	SEPF [E7] (28)										
32											
35	SEK [E7] (25)		SEF [F13] (18)		SEK [E12] (20)			SEK [F13] (18)			
	SEF [E12] (20)		SEPF [F13] (18)								
	SEPF [E12] (20)										
50			SEK [F13] (20)								
63		SXE [F13] (25)	SXE [F13] (25)								
72	SXE [F13] (28)	SXE [F13] (28)									
80	SXE [F13] (28)										
100											

Size list ø x L (mm)

B9	5.0x8.9	C55	6.3x5.4	E7	8.0x6.9	F8	10.0x7.9
		C6	6.3x5.9	E9	8.0x8.9	F13	10.0x12.9
		C9	6.3x8.9	E12	8.0x11.9		
		C10	6.3x9.9	E13	8.0x12.9		

Voltage - Capacitance table (Radial lead type) (Vol. : 20 to 100 V / Cap. : 680 to 2700 μF)

Series [Size]
(ESR mΩ)

V \ μF	680	820	1000	1200	1500	2700
20						
25						
32						
35						
50						
63						
72						
80						
100						

Size list ø x L (mm)

B9	5.0x8.9	C55	6.3x5.4	E7	8.0x6.9	F8	10.0x7.9
		C6	6.3x5.9	E9	8.0x8.9	F13	10.0x12.9
		C9	6.3x8.9	E12	8.0x11.9		
		C10	6.3x9.9	E13	8.0x12.9		

Explanation of part numbers

◇ Part number system

・Surface mount type

16	SVP	3R3	M
Rated voltage	Series	Rated capacitance	Capacitance tolerance

R.voltage (V)	Code
2.0	2
2.5	2R5
4.0	4
6.3	6
10	10
16	16
20	20
25	25
35	35
100	100

Series
SVT
SVPT
SVF
SVPK
SXV
SVPG
SVPF
SVPA
SVPB
SVPC
SVPD
SVPE
SVPS
SVQP
SVP

R.capacitance (μF)	Code
3.3	3R3
4.7	4R7
10	10
22	22
100	100
220	220
470	470
1500	1500

Cap. torerance	Code
±20%	M

・Radial lead type

16	SEPC	470	M	+	T
Rated voltage	Series	Rated capacitance	Capacitance tolerance		Taping or forming of terminal code

R.voltage (V)	Code
2.5	2R5※1
4.0	4
6.3	6
10	10
16	16
20	20
25	25
32	32
100	100

Series
SEF
SEK
SEPG
SXE
SEPC
SEPF
SEQP
SEP

R.capacitance (μF)	Code
6.8	6R8
10	10
22	22
100	100
220	220
470	470
1000	1000
2700	2700

Cap. torerance	Code
±20%	M

Taping products and lead terminal cutting products indicate process code.
Regular lead products don't have code.

※1 Code 2 is used for 2.5 V products of B9, C6, C9, E7, E9 and F13 size in SEPC series.

Mounting specifications

◇ Recommendable reflow soldering (SMD type)

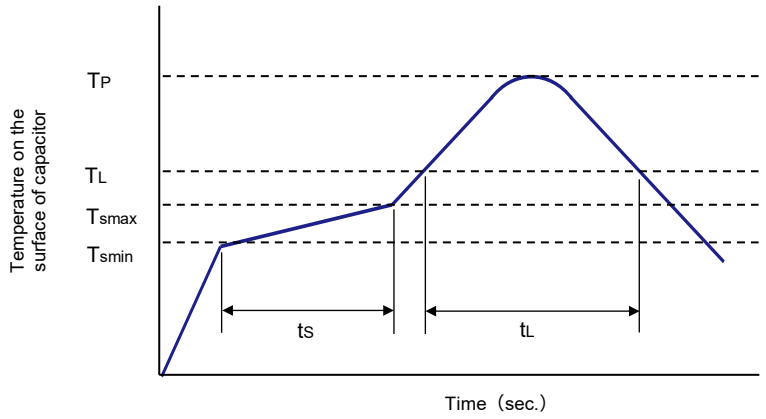

Reflow soldering		Condition A	Condition B	Condition C
		Peak temperature 260 °C lead free soldering profile	Peak temperature 250 °C lead free soldering profile	Peak temperature 250 °C lead free soldering profile (SVPG, SVPF, SVF, SVPK, SXV)
Peak temperature (TP)		260 ℃	250 ℃	250 ℃
Soldering time (tL) above soldering temperature (TL)	TL ≧ 245 ℃	–		30 seconds max.
	TL ≧ 230 ℃	40 seconds max.		–
	TL ≧ 220 ℃	50 seconds max.		–
	TL ≧ 217 ℃	–		90 seconds max.
	TL ≧ 200 ℃	60 seconds max.		–
Preheat	Temperature max. (Tsmax)	180 ℃		200 ℃*1
	Temperature min. (Tsmin)	150 ℃		
	Time (ts) from (Tsmin) to (Tsmax)	120 seconds max.		
The cycles of reflow soldering		1 times	2 times	2 times

*1 SXV series : 180℃

◇ Flow soldering (Radial lead type)

	Temperature	Time	Flow number
Preheating	120 ℃ or less (ambient temperature)	120 sec. or less	1 time
Soldering condition	260 ℃+5 ℃ or less	10+1 sec. or less	2 times or less*1

*1 : When soldering 2 times, total immersion time should be 10+1 sec. or less.

◇ Soldering with a soldering iron

Tip of a soldering iron : 400 ℃±10 ℃
Working time : 5 sec. max.

Land Pattern

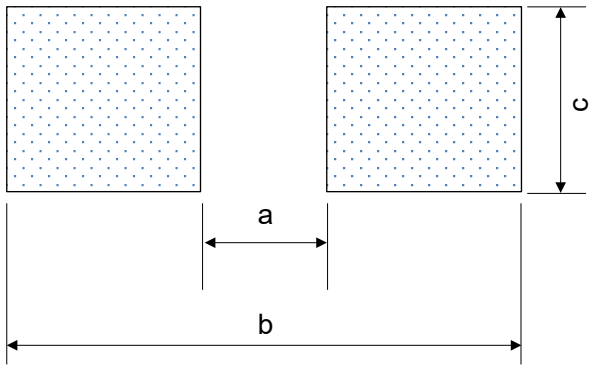

Unit : mm

Size code	a	b	c
A5	1.0	6.2	1.6
B45	1.4	7.4	1.6
B6	1.4	7.4	1.6
C5	2.1	9.1	1.6
C55	2.1	9.1	1.6
C6	2.1	9.1	1.6
C65	2.1	9.1	1.6
C8	2.1	9.1	1.6
C10	2.1	9.1	1.6
C10L	2.1	9.1	2.5
E7	2.8	11.1	1.9
E10	2.8	11.1	1.9
E12	2.8	11.1	1.9
F8	4.3	13.1	1.9
F10	4.3	13.1	1.9
F12	4.3	13.1	1.9

Packing specifications

◇ SMD type

● Taping

1-1. Carrier tape

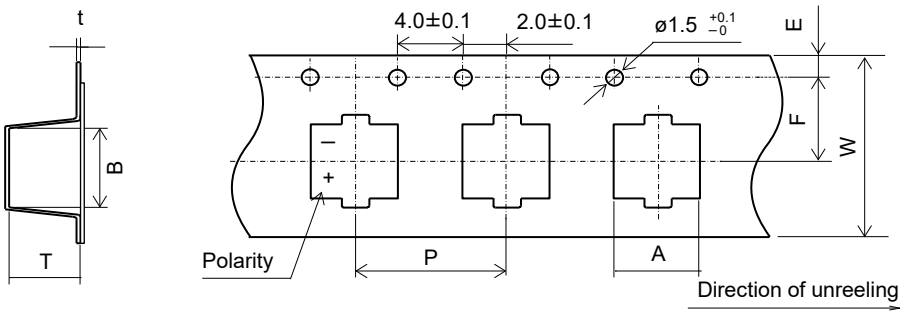

Size code	A±0.2	B±0.2	W±0.3	F±0.1	E±0.1	P±0.1	t±0.1	T±0.2
A5	4.7	4.7	12.0	5.5	1.75	8.0	0.4	5.8
B45	5.6	5.6	16.0	7.5	1.75	8.0	0.4	4.8
B6	5.6	5.6	16.0	7.5	1.75	8.0	0.4	6.2
C5	6.9	6.9	16.0	7.5	1.75	12.0	0.4	5.3
C55	6.9	6.9	16.0	7.5	1.75	12.0	0.4	6.2
C6	6.9	6.9	16.0	7.5	1.75	12.0	0.4	6.2
C65	6.9	6.9	16.0	7.5	1.75	12.0	0.4	6.7
C8	7.0	7.0	16.0	7.5	1.75	12.0	0.5	8.2
C10	7.0	7.0	24.0	11.5	1.75	16.0	0.5	10.5
C10L	7.0	7.0	16.0	7.5	1.75	12.0	0.5	11.0
E7	8.6	8.6	24.0	11.5	1.75	12.0	0.4	7.2
E10	8.6	8.6	24.0	11.5	1.75	16.0	0.5	11.0
E12	8.6	8.6	24.0	11.5	1.75	16.0	0.5	12.3
F8	10.7	10.7	24.0	11.5	1.75	16.0	0.4	8.2
F10	10.7	10.7	24.0	11.5	1.75	16.0	0.4	11.0
F12	10.7	10.7	24.0	11.5	1.75	16.0	0.4	13.0

1-2. Reel

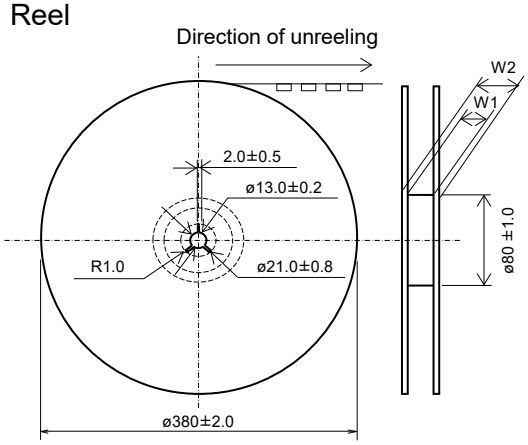

Size code	W1±0.5	W2±1.0
A5	13.0	17.5
B45, B6, C5, C55, C6, C65, C8, C10L	17.0	21.5
C10, E7, E10, E12, F8, F10, F12	25.0	29.5

● Minimum packing quantity and weight

Size code	Quantity (pcs./Reel, ø380)	Typical weight (g)
A5	2000	700
B45	2500	900
B6	1500	800
C5	1300	800
C55	1000	800
C6	1000	800
C65	1000	800
C8	900	800
C10	500	700
C10L	700	900

Size code	Quantity (pcs./Reel, ø380)	Typical weight (g)
E7	1000	1100
E10	500	900
E12	400	800
F8	500	1000
F10	500	1000
F12	400	1000

Packing specifications

◇ Radial lead type

● Lead terminal process

1-1. Correspondence list

※ The following table is a standard specification. Please contact us separately concerming specifications except for that mentioned below. Because of a limit on the length of a model name, the part of process name changes to +S from +TSS, +D from +TS, +3 from +C3. Please contact us for details.

Series	Size code	Bag-packed products (lead terminal cutting)		Taping products
		Not processed	Straight cut	
SEP, SEQP, SEPC	B9, C55, C6, C9, C10, E7, E9, E12	No code	+C3 (+3)	+TSS (+S)
SEPF, SXE, SEPG	E13	No code	+C3 (+3)	+TS (+D)
SEF, SEK	F8, F13	No code	+C3 (+3)	+T

1-2. Lead terminal cutting specifications

Process names	Size code	Lead terminal cutting code	Lead terminal dimensions
Straight cut	B9 C55, C6, C9,C10 E7, E9, E12, E13 F8, F13	+C3 (+3)	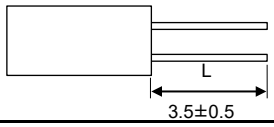 Unit : mm

1-3. Taping specifications for automatic insertion

Size code	Case size	F	Taping code	Taping dimensions
B9	ø5	F=2.0 mm	+TSS (+S)	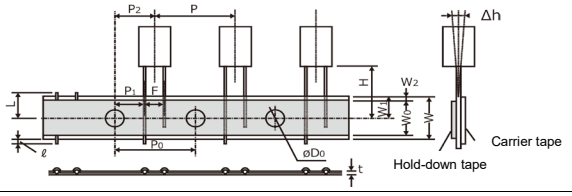
C55, C6, C9, C10	ø6.3	F=2.5 mm		
E7, E9, E12	ø8	F=3.5 mm		
E13	ø8	F=3.5 mm	+TS (+D)	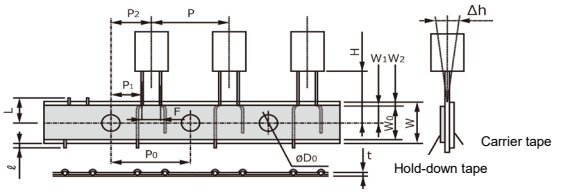
F8, F13	ø10	F=5.0 mm	+T	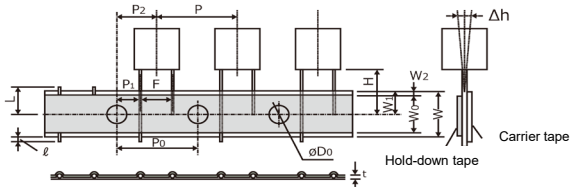

Taping code	Case size	F $^{+0.8}_{-0.2}$	P ±1.0	P_0 ±0.2	P_1 ±0.5	P_2 ±1.0	Δh ±1.0	W ±0.5	W_0 min.	W_1 ±0.5	W_2 max.	H ±0.75	øD_0 ±0.2
+TSS (+S)	ø5	2.0	12.7	12.7	5.35	6.35	0	18.0	9.5	9.0	2.5	17.5	4.0
	ø6.3	2.5	12.7	12.7	5.10	6.35	0	18.0	9.5	9.0	2.5	17.5	4.0
	ø8	3.5	12.7	12.7	4.60	6.35	0	18.0	9.5	9.0	2.5	17.5	4.0
+TS (+D)	ø8	3.5	12.7	12.7	4.60	6.35	0	18.0	9.5	9.0	2.5	17.5	4.0
+T	ø10	5.0	12.7	12.7	3.85	6.35	0	18.0	9.5	9.0	2.5	18.5	4.0

Taping code	Case size	t ±0.3	ℓ max.	L max.
+TSS (+S)	ø5	0.6	0	11.0
	ø6.3	0.6	0	11.0
	ø8	0.6	0	11.0
+TS (+D)	ø8	0.6	0	11.0
+T	ø10	0.6	0	11.0

Unit : mm

● Minimum packing quantity and weight

Size code	Case size	Bag-packed products		Taping products	
		Quantity(pcs./Bag)	Typical weight(g)	Quantity(pcs./Bag)	Typical weight(g)
B9	ø5	500	180	2000	1000
C55	ø6.3	500	150	1500	650
C6	ø6.3	500	160	1500	700
C9	ø6.3	500	240	1500	1000
C10	ø6.3	500	260	1500	1100

Size code	Case size	Bag-packed products		Taping products	
		Quantity(pcs./Bag)	Typical weight(g)	Quantity(pcs./Bag)	Typical weight(g)
E7	ø8	200	110	1000	820
E9	ø8	200	130	1000	900
E12	ø8	200	200	1000	980
E13	ø8	200	160	1000	1060
F8	ø10	200	180	500	890
F13	ø10	200	280	500	940

Panasonic INDUSTRY

OS-CON

Conductive Polymer Aluminum Solid Capacitors

Surface Mount Type

SVT series

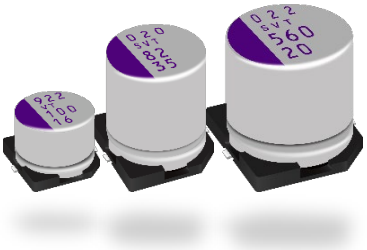

Features

- Low ESR (10 mΩ max.)
- Large capacitance (2700 μF max.)
- 125 ℃ 2000 h
- RoHS compliance, Halogen free

Specifications

Size code	C65	E7	E10	E12	F10	F12
Category temp. range	–55 ℃ to +125 ℃					
Rated voltage range (V)	2.5 to 16	2.5 to 50	16	2.5 to 50	16	2.5 to 50
Nominal cap. range (μF)	100 to 820	18 to 680	560	39 to 1500	1000	68 to 2700
Capacitance tolerance	±20 % (120 Hz / +20 ℃)					
DC leakage current	Please see the attached characteristics list					
Dissipation factor (tan δ)	Please see the attached characteristics list					
Endurance	+125 ℃ 2000 h, rated voltage applied					
	Capacitance change	Within ±20 % of the initial value				
	Dissipation factor (tanδ)	≦ 200 % of the initial limit				
	DC leakage current	Within the initial limit				
Damp heat (Steady state)	+60 ℃, 90 % to 95 % RH, 1000 h, No-applied voltage					
	Capacitance change	Within ±20 % of the initial value				
	Dissipation factor (tanδ)	≦ 150 % of the initial limit				
	DC leakage current	Within the initial limit (after voltage processing)				

Marking

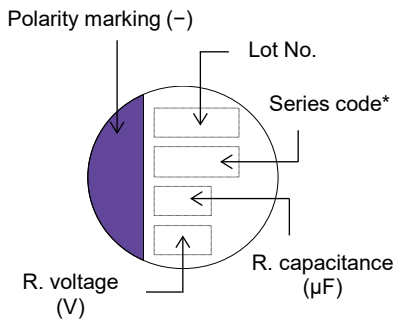

* Depends on the case size.

Dimensions (not to scale)

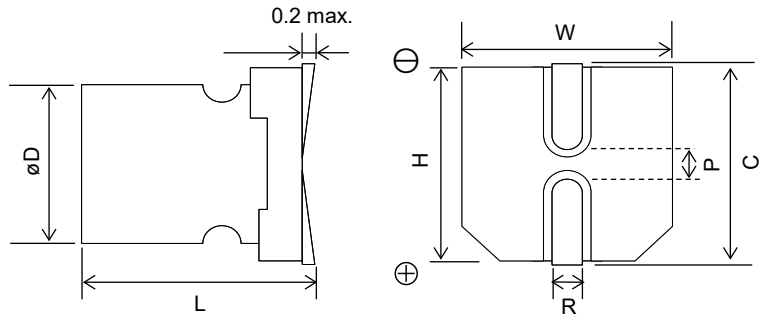

Unit : mm

Size code	øD±0.5	L +0.1 -0.4	W±0.2	H±0.2	C±0.2	R	P*2
C65	6.3	6.4	6.6	6.6	7.3	0.6 to 0.8	2.1
E7	8.0	6.9	8.3	8.3	9.0	0.6 to 0.8	3.2
E10	8.0	10.0*1	8.3	8.3	9.0	0.8 to 1.1	3.2
E12	8.0	11.9	8.3	8.3	9.0	0.8 to 1.1	3.2
F10	10.0	10.0*1	10.3	10.3	11.0	0.8 to 1.1	4.6
F12	10.0	12.6	10.3	10.3	11.0	0.8 to 1.1	4.6

*1: ±0.5, *2: Reference

Design and specifications are each subject to change without notice. Ask factory for the current technical specifications before purchase and/or use.
Should a safety concern arise regarding this product, please be sure to contact us immediately.

Characteristics list

Rated voltage (V)	Rated capacitance (±20 %) (μF)	Case size (mm) øD	Case size (mm) L	Size code	Specifications: Ripple current*1 (mA rms)	Allowable ripple current*1 (mA rms)	ESR*2 (mΩ max.)	tan δ*3	LC*4 (μA)	Standard (Reel size : ø380): Part number	Min. Packaging Q'ty (pcs)
2.5	560	6.3	6.4	C65	1100	3500	16	0.12	300	2R5SVT560M	1000
	680	6.3	6.4		1000	3500	16	0.12	850	2R5SVT680MX	1000
		8.0	6.9	E7	1060	3370	20	0.12	500	2R5SVT680M	1000
	820	6.3	6.4	C65	1100	3500	16	0.12	1020	2R5SVT820M	1000
	1500	8.0	11.9	E12	1620	5150	10	0.12	750	2R5SVT1500M	400
	2700	10.0	12.6	F12	1600	5070	12	0.12	1350	2R5SVT2700M	400
4.0	560	8.0	6.9	E7	1010	3220	22	0.12	500	4SVT560M	1000
	1500	8.0	11.9	E12	1480	4700	12	0.12	1200	4SVT1500M	400
6.3	330	6.3	6.4	C65	1070	3390	15	0.12	415	6SVT330M	1000
	390	8.0	6.9	E7	1010	3220	22	0.12	491	6SVT390M	1000
	820	8.0	11.9	E12	1480	4700	12	0.12	1033	6SVT820M	400
16	100	6.3	6.4	C65	780	2490	24	0.12	300	16SVT100M	1000
	270	8.0	6.9	E7	1040	3300	22	0.12	864	16SVT270M	1000
	560	8.0	10.0	E10	1230	3900	18	0.12	1792	16SVT560MX	500
	560	8.0	11.9	E12	1560	4950	14	0.12	1792	16SVT560M	400
	1000	10.0	10.0	F10	1350	4300	16	0.12	3200	16SVT1000MX	500
	1000	10.0	12.6	F12	1700	5400	12	0.12	3200	16SVT1000M	400
20	180	8.0	6.9	E7	1010	3200	25	0.12	720	20SVT180M	1000
	390	8.0	11.9	E12	1560	4950	14	0.12	1560	20SVT390M	400
	560	10.0	12.6	F12	1700	5400	12	0.12	2240	20SVT560M	400
25	100	8.0	6.9	E7	1010	3200	24	0.12	500	25SVT100M	1000
	180	8.0	11.9	E12	1470	4650	16	0.12	900	25SVT180M	400
	330	10.0	12.6	F12	1580	5000	14	0.12	1650	25SVT330M	400
35	39	8.0	6.9	E7	880	2800	30	0.12	273	35SVT39M	1000
	82	8.0	11.9	E12	1260	4000	20	0.12	574	35SVT82M	400
	120	10.0	12.6	F12	1390	4400	18	0.12	840	35SVT120M	400
50	18	8.0	6.9	E7	850	2700	35	0.12	180	50SVT18M	1000
	39	8.0	11.9	E12	1200	3800	25	0.12	390	50SVT39M	400
	68	10.0	12.6	F12	1350	4300	20	0.12	680	50SVT68M	400

*1: Ripple current (100 kHz / +105 ℃ ＜ Tx ≦ +125 ℃) / Allowable ripple current (100 kHz / Tx ≦ +105 ℃)
Tx: Temperature measured at the top surface of aluminum case including self-heating by ripple current
*2: ESR (100 kHz to 300 kHz / +20 ℃)
*3: tan δ (120 Hz / +20 ℃)
*4: After 2 minutes
◆ Please refer to each page in this catarog for “Reflow conditions” and “Taping specifications”.

Frequency correction factor for ripple current

Frequency(f)	120 Hz ≦ f < 1 kHz	1 kHz ≦ f < 10 kHz	10 kHz ≦ f < 100 kHz	100 kHz ≦ f < 500 kHz
Coefficient	0.05	0.3	0.7	1

Panasonic INDUSTRY

OS-CON

Conductive Polymer Aluminum Solid Capacitors

Surface Mount Type

SVPT series

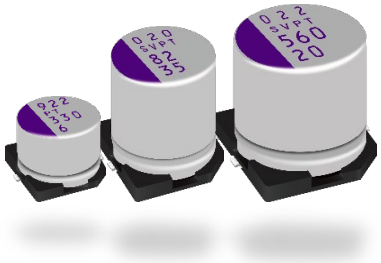

Features

- Low ESR (10 mΩ max.)
- Large capacitance (2700 μF max.)
- 105 ℃ 20000 h
- RoHS compliance, Halogen free

Specifications

Size code	C65	E7	E10	E12	F10	F12
Category temp. range	–55 ℃ to +105 ℃					
Rated voltage range (V)	2.5 to 16	2.5 to 50	16	2.5 to 50	16	2.5 to 50
Nominal cap. range (μF)	100 to 820	18 to 680	560	39 to 1500	1000	68 to 2700
Capacitance tolerance	±20 % (120 Hz / +20 ℃)					
DC leakage current	Please see the attached characteristics list					
Dissipation factor (tan δ)	Please see the attached characteristics list					
Endurance	+105 ℃ 20000 h, rated voltage applied					
	Capacitance change	Within ±20 % of the initial value				
	Dissipation factor (tanδ)	≦ 150 % of the initial limit				
	DC leakage current	Within the initial limit				
Damp heat (Steady state)	+60 ℃, 90 % to 95 % RH, 1000 h, No-applied voltage					
	Capacitance change	Within ±20 % of the initial value				
	Dissipation factor (tanδ)	≦ 150 % of the initial limit				
	DC leakage current	Within the initial limit (after voltage processing)				

Marking

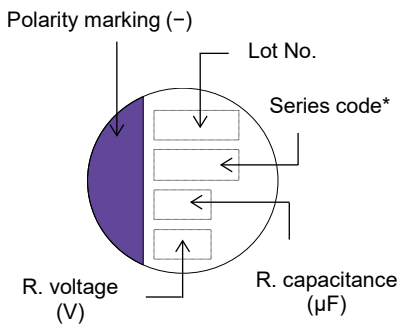

* Depends on the case size.

Dimensions (not to scale)

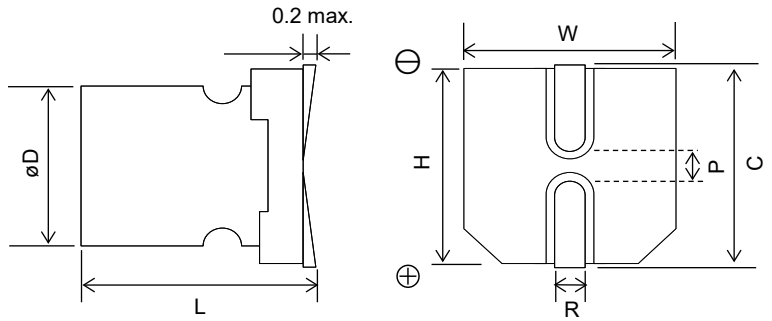

Unit : mm

Size code	øD±0.5	L +0.1 -0.4	W±0.2	H±0.2	C±0.2	R	P*2
C65	6.3	6.4	6.6	6.6	7.3	0.6 to 0.8	2.1
E7	8.0	6.9	8.3	8.3	9.0	0.6 to 0.8	3.2
E10	8.0	10.0*1	8.3	8.3	9.0	0.8 to 1.1	3.2
E12	8.0	11.9	8.3	8.3	9.0	0.8 to 1.1	3.2
F10	10.0	10.0*1	10.3	10.3	11.0	0.8 to 1.1	4.6
F12	10.0	12.6	10.3	10.3	11.0	0.8 to 1.1	4.6

*1: ±0.5, *2: Reference

Design and specifications are each subject to change without notice. Ask factory for the current technical specifications before purchase and/or use.
Should a safety concern arise regarding this product, please be sure to contact us immediately.

Characteristics list

Rated voltage (V)	Rated capacitance (±20 %) (μF)	Case size (mm)		Size code	Specifications				Standard（Reel size : ø380）	
		øD	L		Ripple current*1 (mA rms)	ESR*2 (mΩ max.)	tan δ*3	LC*4 (μA)	Part number	Min. Packaging Q'ty (pcs)
2.5	560	6.3	6.4	C65	3500	16	0.12	300	2R5SVPT560M	1000
	680	6.3	6.4		3500	16	0.12	850	2R5SVPT680MX	1000
		8.0	6.9	E7	3370	20	0.12	500	2R5SVPT680M	1000
	820	6.3	6.4	C65	3500	16	0.12	1020	2R5SVPT820M	1000
	1500	8.0	11.9	E12	5150	10	0.12	750	2R5SVPT1500M	400
	2700	10.0	12.6	F12	5070	12	0.12	1350	2R5SVPT2700M	400
4.0	560	8.0	6.9	E7	3220	22	0.12	500	4SVPT560M	1000
	1500	8.0	11.9	E12	4700	12	0.12	1200	4SVPT1500M	400
6.3	330	6.3	6.4	C65	3390	15	0.12	415	6SVPT330M	1000
	390	8.0	6.9	E7	3220	22	0.12	491	6SVPT390M	1000
	820	8.0	11.9	E12	4700	12	0.12	1033	6SVPT820M	400
16	100	6.3	6.4	C65	2490	24	0.12	300	16SVPT100M	1000
	270	8.0	6.9	E7	3300	22	0.12	864	16SVPT270M	1000
	560	8.0	10.0	E10	3900	18	0.12	1792	16SVPT560MX	500
	560	8.0	11.9	E12	4950	14	0.12	1792	16SVPT560M	400
	1000	10.0	10.0	F10	4300	16	0.12	3200	16SVPT1000MX	500
	1000	10.0	12.6	F12	5400	12	0.12	3200	16SVPT1000M	400
20	180	8.0	6.9	E7	3200	25	0.12	720	20SVPT180M	1000
	390	8.0	11.9	E12	4950	14	0.12	1560	20SVPT390M	400
	560	10.0	12.6	F12	5400	12	0.12	2240	20SVPT560M	400
25	100	8.0	6.9	E7	3200	24	0.12	500	25SVPT100M	1000
	180	8.0	11.9	E12	4650	16	0.12	900	25SVPT180M	400
	330	10.0	12.6	F12	5000	14	0.12	1650	25SVPT330M	400
35	39	8.0	6.9	E7	2800	30	0.12	273	35SVPT39M	1000
	82	8.0	11.9	E12	4000	20	0.12	574	35SVPT82M	400
	120	10.0	12.6	F12	4400	18	0.12	840	35SVPT120M	400
50	18	8.0	6.9	E7	2700	35	0.12	180	50SVPT18M	1000
	39	8.0	11.9	E12	3800	25	0.12	390	50SVPT39M	400
	68	10.0	12.6	F12	4300	20	0.12	680	50SVPT68M	400

*1: Ripple current (100 kHz / +105 ℃)
The surface temperature of aluminum case top must not exceed 105 °C. A rise in temperature due to self-heating by ripple current should be factored in.
*2: ESR (100 kHz to 300 kHz / +20 ℃)
*3: tan δ (120 Hz / +20 ℃)
*4: After 2 minutes
◆ Please refer to each page in this catarog for “Reflow conditions” and “Taping specifications”.

Frequency correction factor for ripple current

Frequency(f)	120 Hz ≦ f < 1 kHz	1 kHz ≦ f < 10 kHz	10 kHz ≦ f < 100 kHz	100 kHz ≦ f < 500 kHz
Coefficient	0.05	0.3	0.7	1

Panasonic INDUSTRY

OS-CON

Conductive Polymer Aluminum Solid Capacitors

Surface Mount Type

SVF series

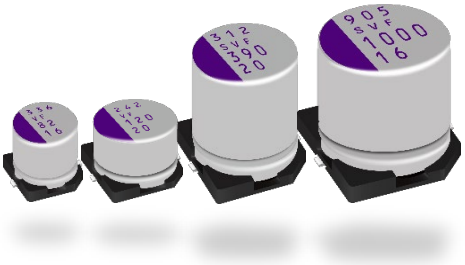

Features

- High voltage (50 V max.)
- Large capacitance (1000 μF max.)
- 125 ℃ 1000 h
- RoHS compliance, Halogen free

Specifications

Size code	B6	C6	E7	E12	F10	F12
Category temp. range	–55 ℃ to +125 ℃					
Rated voltage range	16 V to 25 V	16 V to 50 V			16 V	16 V to 50 V
Nominal cap.range	27 μF to 82 μF	10 μF to 180 μF	18 μF to 270 μF	39 μF to 560 μF	1000 μF	68 μF to 1000 μF
Capacitance tolerance	±20 % (120 Hz / +20 ℃)					
DC leakage current	Please see the attached characteristics list					
Dissipation factor (tan δ)	Please see the attached characteristics list					
Endurance	+125 ℃ 1000 h, rated voltage applied					
	Capacitance change	Within ±20 % of the initial value				
	Dissipation factor (tanδ)	≦ 200 % of the initial limit				
	DC leakage current	Within the initial limit				
Damp heat (Steady state)	+60 ℃, 90 % to 95 % RH, 1000 h, No-applied voltage					
	Capacitance change	Within ±20 % of the initial value				
	Dissipation factor (tanδ)	≦ 150 % of the initial limit				
	DC leakage current	Within the initial limit (after voltage processing)				

Marking

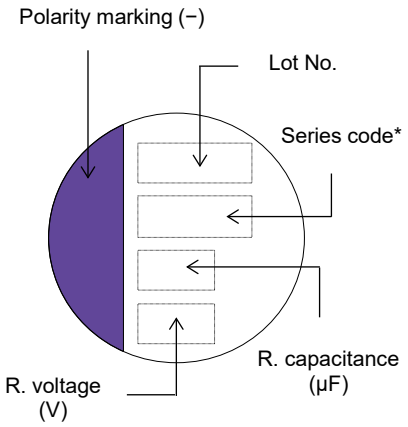

* Depends on the case size.

Dimensions (not to scale)

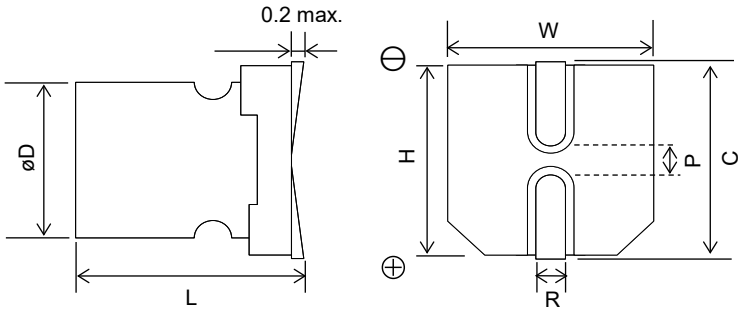

Unit : mm

Size code	øD±0.5	L +0.1 -0.4	W±0.2	H±0.2	C±0.2	R	P*2
B6	5.0	5.9	5.3	5.3	6.0	0.6 to 0.8	1.4
C6	6.3	5.9	6.6	6.6	7.3	0.6 to 0.8	2.1
E7	8.0	6.9	8.3	8.3	9.0	0.6 to 0.8	3.2
E12	8.0	11.9	8.3	8.3	9.0	0.8 to 1.1	3.2
F10	10.0	10.0*1	10.3	10.3	11.0	0.8 to 1.1	4.6
F12	10.0	12.6	10.3	10.3	11.0	0.8 to 1.1	4.6

*1 : ±0.5, *2 : Reference

Design and specifications are each subject to change without notice. Ask factory for the current technical specifications before purchase and/or use.
Should a safety concern arise regarding this product, please be sure to contact us immediately.

Characteristics list

Rated voltage (V)	Rated capacitance (±20 %) (μF)	Case size (mm)		Size code	Specifications					Standard (Reel size : ø380)	
		øD	L		Ripple current*1 (mA rms)	Allowable ripple current*1 (mA rms)	ESR*2 (mΩ max.)	tan δ*3	LC*4 (μA)	Part number	Min. Packaging Q'ty (pcs)
16	82	5.0	5.9	B6	940	3000	27	0.12	262	16SVF82M	1500
	180	6.3	5.9	C6	1040	3300	22	0.12	576	16SVF180M	1000
	270	8.0	6.9	E7	1040	3300	22	0.12	864	16SVF270M	1000
	560	8.0	11.9	E12	1560	4950	14	0.12	1792	16SVF560M	400
	1000	10.0	10.0	F10	1350	4300	16	0.12	3200	16SVF1000MX	500
		10.0	12.6	F12	1700	5400	12	0.12	3200	16SVF1000M	400
20	56	5.0	5.9	B6	880	2800	30	0.12	224	20SVF56M	1500
	120	6.3	5.9	C6	1010	3200	25	0.12	480	20SVF120M	1000
	180	8.0	6.9	E7	1010	3200	25	0.12	720	20SVF180M	1000
	390	8.0	11.9	E12	1560	4950	14	0.12	1560	20SVF390M	400
	560	10.0	12.6	F12	1700	5400	12	0.12	2240	20SVF560M	400
25	27	5.0	5.9	B6	770	2450	40	0.12	135	25SVF27M	1500
	47	6.3	5.9	C6	880	2800	30	0.12	235	25SVF47M	1000
	56	6.3	5.9		880	2800	30	0.12	280	25SVF56M	1000
	82	8.0	6.9	E7	940	3000	28	0.12	410	25SVF82M	1000
	100	8.0	6.9		1010	3200	24	0.12	500	25SVF100M	1000
	180	8.0	11.9	E12	1470	4650	16	0.12	900	25SVF180M	400
	330	10.0	12.6	F12	1580	5000	14	0.12	1650	25SVF330M	400
35	22	6.3	5.9	C6	820	2600	35	0.12	154	35SVF22M	1000
	39	8.0	6.9	E7	880	2800	30	0.12	273	35SVF39M	1000
	82	8.0	11.9	E12	1260	4000	20	0.12	574	35SVF82M	400
	120	10.0	12.6	F12	1390	4400	18	0.12	840	35SVF120M	400
50	10	6.3	5.9	C6	790	2500	40	0.12	100	50SVF10M	1000
	18	8.0	6.9	E7	850	2700	35	0.12	180	50SVF18M	1000
	39	8.0	11.9	E12	1200	3800	25	0.12	390	50SVF39M	400
	68	10.0	12.6	F12	1350	4300	20	0.12	680	50SVF68M	400

*1: Ripple current (100 kHz / +105 ℃ < Tx ≦ +125 ℃) /Allowable ripple current (100 kHz / Tx ≦ +105 ℃)
*2: ESR (100 kHz to 300 kHz / +20 ℃)
*3: tan δ (120 Hz / +20 ℃)
*4: After 2 minutes
◆ Please refer to each page in this catarog for “Reflow conditions” and “Taping specifications”.

Frequency correction factor for ripple current

Frequency(f)	120 Hz ≦ f < 1 kHz	1 kHz ≦ f < 10 kHz	10 kHz ≦ f < 100 kHz	100 kHz ≦ f < 500 kHz
Coefficient	0.05	0.3	0.7	1

Panasonic INDUSTRY

OS-CON

Conductive Polymer Aluminum Solid Capacitors

Surface Mount Type

SVPK series

Features

- High voltage (50 V max.)
- 125 ℃ 1000 h
- RoHS compliance, Halogen free

Specifications

Size code	B6	C6	E7	E12	F12
Category temp. range	–55 ℃ to +125 ℃				
Rated voltage range	16 V to 50 V				
Nominal cap.range	10 μF to 100 μF	22 μF to 220 μF	33 μF to 330 μF	68 μF to 680 μF	120 μF to 1200 μF
Capacitance tolerance	±20 % (120 Hz / +20 ℃)				
DC leakage current	Please see the attached characteristics list				
Dissipation factor (tan δ)	Please see the attached characteristics list				
Endurance	+125 ℃ 1000 h, rated voltage applied				
	Capacitance change	Within ±20 % of the initial value			
	Dissipation factor (tanδ)	≦ 200 % of the initial limit			
	DC leakage current	Within the initial limit			
Damp heat (Steady state)	+60 ℃, 90 % to 95 % RH, 1000 h, No-applied voltage				
	Capacitance change	Within ±20 % of the initial value			
	Dissipation factor (tanδ)	≦ 150 % of the initial limit			
	DC leakage current	Within the initial limit (after voltage processing)			

Marking

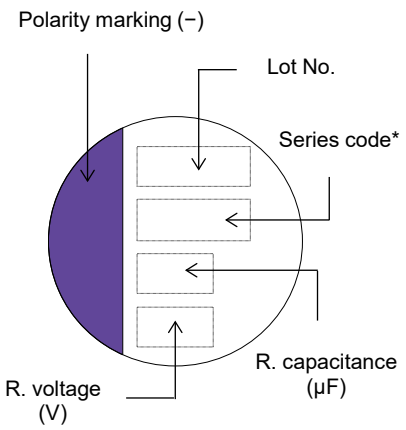

* Depends on the case size.

Dimensions (not to scale)

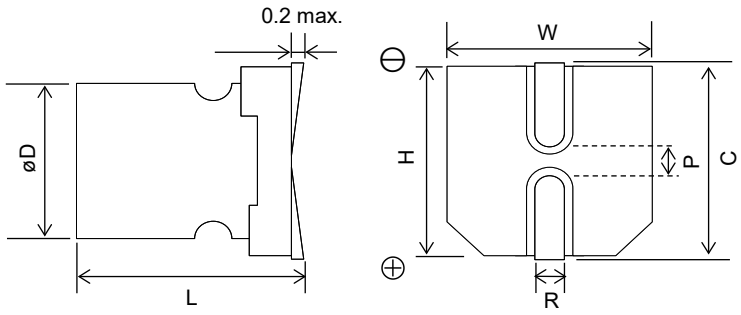

Unit : mm

Size code	øD±0.5	L +0.1 -0.4	W±0.2	H±0.2	C±0.2	R	P*1
B6	5.0	5.9	5.3	5.3	6.0	0.6 to 0.8	1.4
C6	6.3	5.9	6.6	6.6	7.3	0.6 to 0.8	2.1
E7	8.0	6.9	8.3	8.3	9.0	0.6 to 0.8	3.2
E12	8.0	11.9	8.3	8.3	9.0	0.8 to 1.1	3.2
F12	10.0	12.6	10.3	10.3	11.0	0.8 to 1.1	4.6

*1 : Reference

Design and specifications are each subject to change without notice. Ask factory for the current technical specifications before purchase and/or use.
Should a safety concern arise regarding this product, please be sure to contact us immediately.

Characteristics list

Rated voltage (V)	Rated capacitance (±20 %) (μF)	Case size (mm)		Size code	Specifications					Standard (Reel size : ø380)	
		øD	L		Ripple current*1 (mA rms)	Allowable ripple current*1 (mA rms)	ESR*2 (mΩ max.)	tan δ*3	LC*4 (μA)	Part number	Min. Packaging Q'ty (pcs)
16	100	5.0	5.9	B6	940	3000	27	0.12	320	16SVPK100M	1500
	220	6.3	5.9	C6	1040	3300	22	0.12	704	16SVPK220M	1000
	330	8.0	6.9	E7	1040	3300	22	0.12	1056	16SVPK330M	1000
	680	8.0	11.9	E12	1560	4950	14	0.12	2176	16SVPK680M	400
	1200	10.0	12.6	F12	1700	5400	12	0.12	3840	16SVPK1200M	400
20	68	5.0	5.9	B6	880	2800	30	0.12	272	20SVPK68M	1500
	150	6.3	5.9	C6	1010	3200	25	0.12	600	20SVPK150M	1000
	220	8.0	6.9	E7	1010	3200	25	0.12	880	20SVPK220M	1000
	470	8.0	11.9	E12	1560	4950	14	0.12	1880	20SVPK470M	400
	680	10.0	12.6	F12	1700	5400	12	0.12	2720	20SVPK680M	400
25	33	5.0	5.9	B6	820	2600	35	0.12	165	25SVPK33M	1500
	82	6.3	5.9	C6	960	3060	25	0.12	410	25SVPK82M	1000
	120	8.0	6.9	E7	1010	3200	24	0.12	600	25SVPK120M	1000
	270	8.0	11.9	E12	1470	4650	16	0.12	1350	25SVPK270M	400
	470	10.0	12.6	F12	1590	5000	14	0.12	2350	25SVPK470M	400
35	22	5.0	5.9	B6	820	2600	35	0.12	154	35SVPK22M	1500
	47	6.3	5.9	C6	930	2950	27	0.12	329	35SVPK47M	1000
	82	8.0	6.9	E7	960	3060	25	0.12	574	35SVPK82M	1000
	180	8.0	11.9	E12	1260	4000	20	0.12	1260	35SVPK180M	400
	330	10.0	12.6	F12	1390	4400	18	0.12	2310	35SVPK330M	400
50	10	5.0	5.9	B6	550	1750	80	0.12	100	50SVPK10M	1500
	22	6.3	5.9	C6	820	2600	35	0.12	220	50SVPK22M	1000
	33	8.0	6.9	E7	850	2700	35	0.12	330	50SVPK33M	1000
	68	8.0	11.9	E12	1200	3800	25	0.12	680	50SVPK68M	400
	120	10.0	12.6	F12	1350	4300	20	0.12	1200	50SVPK120M	400

*1: Ripple current (100 kHz / +105 ℃ < Tx ≦ +125 ℃) /Allowable ripple current (100 kHz / Tx ≦ +105 ℃)
*2: ESR (100 kHz to 300 kHz / +20 ℃)
*3: tan δ (120 Hz / +20 ℃)
*4: After 2 minutes
◆ Please refer to each page in this catarog for “Reflow conditions” and “Taping specifications”.

Frequency correction factor for ripple current

Frequency(f)	120 Hz ≦ f < 1 kHz	1 kHz ≦ f < 10 kHz	10 kHz ≦ f < 100 kHz	100 kHz ≦ f < 500 kHz
Coefficient	0.05	0.3	0.7	1

Design and specifications are each subject to change without notice. Ask factory for the current technical specifications before purchase and/or use.
Should a safety concern arise regarding this product, please be sure to contact us immediately.

Panasonic INDUSTRY

OS-CON

Conductive Polymer Aluminum Solid Capacitors

Surface Mount Type

SXV series

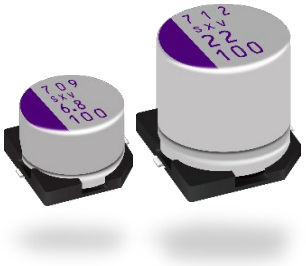

Features

- Super high voltage (100 V max.)
- 125 ℃ 1000 h
- RoHS compliance, Halogen free

Specifications

Size code	E7	E12	F8	F12
Category temp. range	–55 ℃ to +125 ℃			
Rated voltage range	63 V to 100 V			
Nominal cap.range	6.8 μF to 18 μF	15 μF to 68 μF	15 μF to 39 μF	18 μF to 120 μF
Capacitance tolerance	±20 % (120 Hz / +20 ℃)			
DC leakage current	Please see the attached characteristics list			
Dissipation factor (tan δ)	Please see the attached characteristics list			
Endurance	+125 ℃ 1000 h, rated voltage applied			
	Capacitance change	Within ±20 % of the initial value		
	Dissipation factor (tanδ)	≦ 200 % of the initial limit		
	DC leakage current	Within the initial limit		
Damp heat (Steady state)	+60 ℃, 90 % to 95 % RH, 1000 h, No-applied voltage			
	Capacitance change	Within ±20 % of the initial value		
	Dissipation factor (tanδ)	≦ 150 % of the initial limit		
	DC leakage current	Within the initial limit (after voltage processing)		

Marking

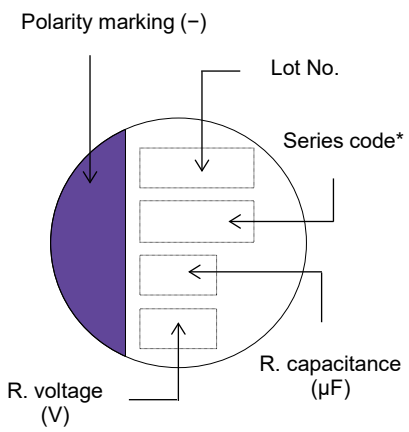

* Depends on the case size.

Dimensions (not to scale)

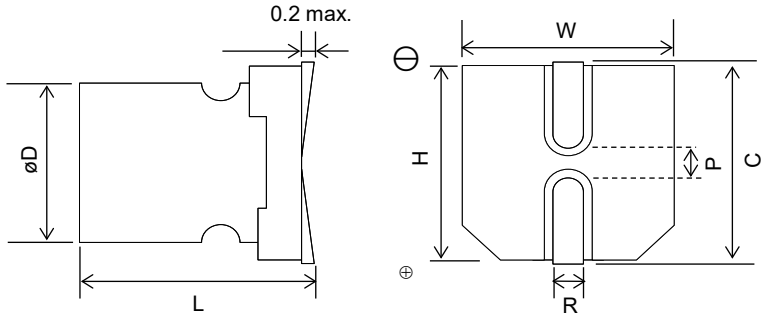

Unit : mm

Size code	øD±0.5	L +0.1 -0.4	W±0.2	H±0.2	C±0.2	R	P*1
E7	8.0	6.9	8.3	8.3	9.0	0.6 to 0.8	3.2
E12	8.0	11.9	8.3	8.3	9.0	0.8 to 1.1	3.2
F8	10.0	7.9	10.3	10.3	11.0	0.6 to 0.8	4.6
F12	10.0	12.6	10.3	10.3	11.0	0.8 to 1.1	4.6

*1 : Reference

Design and specifications are each subject to change without notice. Ask factory for the current technical specifications before purchase and/or use.
Should a safety concern arise regarding this product, please be sure to contact us immediately.

Characteristics list

Rated voltage (V)	Rated capacitance (±20 %) (μF)	Case size (mm)		Size code	Specifications					Standard (Reel size : ø380)	
		øD	L		Ripple current*1 (mA rms)	Allowable ripple current*1 (mA rms)	ESR*2 (mΩ max.)	tan δ*3	LC*4 (μA)	Part number	Min. Packaging Q'ty (pcs)
63	18	8.0	6.9	E7	340	1100	60	0.12	56	63SXV18M	1000
	33	8.0	11.9	E12	930	2950	25	0.12	104	63SXV33M	400
	39	8.0	11.9	E12	930	2950	25	0.12	122	63SXV39M	400
		10.0	7.9	F8	690	2190	50	0.12	122	63SXV39MX	500
	56	8.0	11.9	E12	930	2950	25	0.12	176	63SXV56M	400
	68	8.0	11.9	E12	930	2950	25	0.12	214	63SXV68MX	400
		10.0	12.6	F12	1030	3280	25	0.12	214	63SXV68M	400
	100	10.0	12.6	F12	1030	3280	25	0.12	315	63SXV100M	400
	120	10.0	12.6	F12	1030	3280	25	0.12	378	63SXV120M	400
72	82	10.0	12.6	F12	980	3100	28	0.12	295	72SXV82M	400
	100	10.0	12.6	F12	980	3100	28	0.12	360	72SXV100M	400
80	12	8.0	6.9	E7	340	1100	60	0.12	48	80SXV12M	1000
	27	8.0	11.9	E12	780	2490	35	0.12	108	80SXV27M	400
		10.0	7.9	F8	660	2080	55	0.12	108	80SXV27MX	500
	33	8.0	11.9	E12	780	2490	35	0.12	132	80SXV33M	400
	47	8.0	11.9	E12	780	2490	35	0.12	188	80SXV47MX	400
		10.0	12.6	F12	980	3100	28	0.12	188	80SXV47M	400
	56	10.0	12.6	F12	980	3100	28	0.12	224	80SXV56M	400
	82	10.0	12.6	F12	980	3100	28	0.12	328	80SXV82M	400
100	6.8	8.0	6.9	E7	340	1100	60	0.12	34	100SXV6R8M	1000
	15	10.0	7.9	F8	630	2000	60	0.12	75	100SXV15MX	500
		8.0	11.9	E12	730	2350	40	0.12	75	100SXV15M	400
	18	10.0	12.6	F12	940	3000	30	0.12	90	100SXV18M	400
		8.0	11.9	E12	730	2350	40	0.12	90	100SXV18MX	400
	22	10.0	12.6	F12	940	3000	30	0.12	110	100SXV22M	400
	27	8.0	11.9	E12	730	2350	40	0.12	135	100SXV27MX	400
		10.0	12.6	F12	940	3000	30	0.12	135	100SXV27M	400
	39	10.0	12.6	F12	940	3000	30	0.12	195	100SXV39M	400

*1: Ripple current (100 kHz / +105 ℃ < Tx ≦ +125 ℃) /Allowable ripple current (100 kHz / Tx ≦ +105 ℃)
*2: ESR (100 kHz to 300 kHz / +20 ℃)
*3: tan δ (120 Hz / +20 ℃)
*4: After 2 minutes
◆ Please refer to each page in this catarog for “Reflow conditions” and “Taping specifications”.

Frequency correction factor for ripple current

Frequency(f)	120 Hz ≦ f < 1 kHz	1 kHz ≦ f < 10 kHz	10 kHz ≦ f < 100 kHz	100 kHz ≦ f < 500 kHz
Coefficient	0.05	0.3	0.7	1

Panasonic INDUSTRY

⚠ Some part numbers are not a recommended product.
Not recommended for new design.

OS-CON

Conductive Polymer Aluminum Solid Capacitors

Surface Mount Type

SVPG series

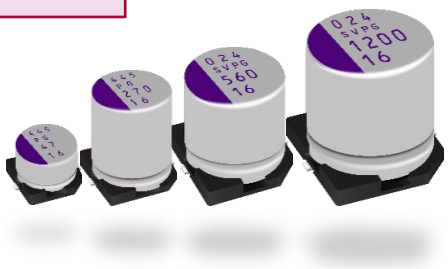

Features

- Low profile (Height 4.5 mm max.)
- Low ESR (6.5 mΩ max.)
- High ripple current (7500 mA rms max.)
- RoHS compliance, Halogen free

Specifications

Size code	B45	B6	C6	C8	C10	C10L	E7	E10	E12	F10	F12
Category temp. range	–55 ℃ to +105 ℃										
Rated voltage range (V)	16 to 25	16	16 ～ 25			16	16 ～ 25	16	16 to 25	16	16 to 25
Nominal cap.range (μF)	15 to 47	100	82 to 220	120 to 270	150 to 270	330	120 to 330	560	270 to 680	820	470 to 1200
Capacitance tolerance	±20 % (120 Hz / +20 ℃)										
DC leakage current	Please see the attached characteristics list										
Dissipation factor (tan δ)	Please see the attached characteristics list										

Endurance	+105 ℃ 5000 h, rated voltage applied	
	Capacitance change	Within ±20 % of the initial value
	Dissipation factor (tanδ)	≦ 150 % of the initial limit
	DC leakage current	Within the initial limit
Damp heat (Steady state)	+60 ℃, 90 % to 95 % RH, 1000 h, No-applied voltage	
	Capacitance change	Within ±20 % of the initial value
	Dissipation factor (tanδ)	≦ 150 % of the initial limit
	DC leakage current	Within the initial limit (after voltage processing)

Marking

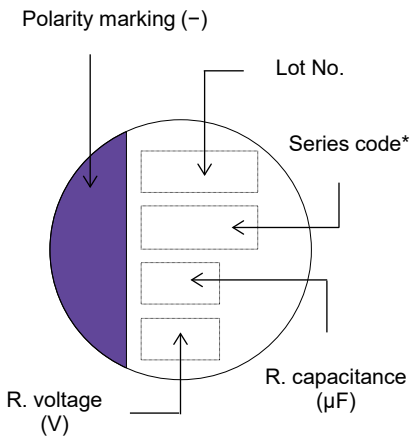

* Depends on the case size.

Dimensions (not to scale)

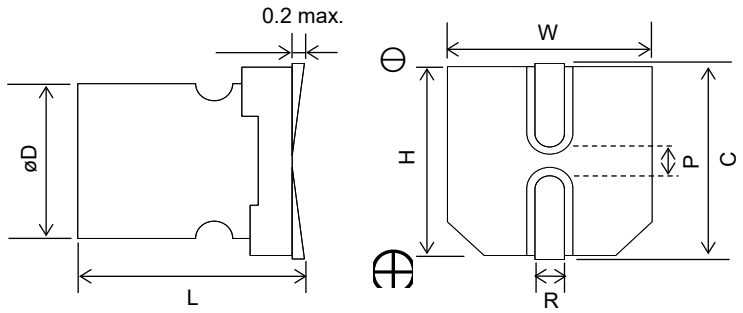

Unit : mm

Size code	øD±0.5	L +0.1 -0.4	W±0.2	H±0.2	C±0.2	R	P*2
B45	5.0	4.4	5.3	5.3	6.0	0.6 to 0.8	1.4
B6	5.0	5.9	5.3	5.3	6.0	0.6 to 0.8	1.4
C6	6.3	5.9	6.6	6.6	7.3	0.6 to 0.8	2.1
C8	6.3	7.9	6.6	6.6	7.3	0.6 to 0.8	2.1
C10	6.3	9.9	6.6	6.6	7.3	0.6 to 0.8	2.1
C10L	6.3	10.4	6.6	6.6	7.3	1.5 to 1.8	2.1
E7	8.0	6.9	8.3	8.3	9.0	0.6 to 0.8	3.2
E10	8.0	10.0*1	8.3	8.3	9.0	0.8 to 1.1	3.2
E12	8.0	11.9	8.3	8.3	9.0	0.8 to 1.1	3.2
F10	10.0	10.0*1	10.3	10.3	11.0	0.8 to 1.1	4.6
F12	10.0	12.6	10.3	10.3	11.0	0.8 to 1.1	4.6

*1 : ±0.5, *2 : Reference

Design and specifications are each subject to change without notice. Ask factory for the current technical specifications before purchase and/or use.
Should a safety concern arise regarding this product, please be sure to contact us immediately.

Characteristics list

Rated voltage (V)	Rated capacitance (±20 %) (μF)	Case size (mm) øD	Case size (mm) L	Size code	Specifications: Ripple current*1 (mA rms)	Specifications: ESR*2 (mΩ max.)	Specifications: tan δ*3	Specifications: LC*4 (μA)	Standard (Reel size : ø380): Part number	Standard (Reel size : ø380): Min. Packaging Q'ty (pcs)
16	47	5.0	4.4	B45	3200	25	0.12	150	16SVPG47M	2500
	100	5.0	5.9	B6	4000	15	0.12	320	16SVPG100M	1500
	220	6.3	5.9	C6	4100	14	0.12	704	16SVPG220M	1000
	270	6.3	7.9	C8	5080	10	0.12	864	16SVPG270MX	900
		6.3	9.9	C10	5800	8	0.12	864	16SVPG270M	500
	330	6.3	10.4	C10L	7500	6.5	0.12	1056	16SVPG330M	700
		8.0	6.9	E7	4100	16	0.12	1056	16SVPG330MX	1000
	560	8.0	10.0	E10	5200	10	0.12	1792	16SVPG560M	500
	680	8.0	11.9	E12	6500	8	0.12	2176	16SVPG680M	400
	820	10.0	10.0	F10	5700	9	0.12	2624	16SVPG820M	500
	1200	10.0	12.6	F12	7000	7	0.12	3840	16SVPG1200M	400
20	33	5.0	4.4	B45	3000	27	0.12	132	20SVPG33M	2500
	120	6.3	5.9	C6	3750	18	0.12	480	20SVPG120M	1000
	180	6.3	7.9	C8	4200	14	0.12	720	20SVPG180MX	900
		6.3	9.9	C10	4700	11	0.12	720	20SVPG180M	500
	220	8.0	6.9	E7	3750	18	0.12	880	20SVPG220M	1000
	470	8.0	11.9	E12	5850	10	0.12	1880	20SVPG470M	400
	680	10.0	12.6	F12	6200	9	0.12	2720	20SVPG680M	400
25	NRFND 15	5.0	4.4	B45	2800	30	0.12	75	25SVPG15M	2500
	82	6.3	5.9	C6	3750	18	0.12	410	25SVPG82M	1000
	120	6.3	7.9	C8	3900	15	0.12	600	25SVPG120MX	900
		8.0	6.9	E7	3800	17	0.12	600	25SVPG120M	1000
	150	6.3	9.9	C10	4200	13	0.12	750	25SVPG150M	500
	270	8.0	11.9	E12	5350	12	0.12	1350	25SVPG270M	400
	470	10.0	12.6	F12	5900	10	0.12	2350	25SVPG470M	400

*1: Ripple current (100 kHz / +105 ℃)
*2: ESR (100 kHz to 300 kHz / +20 ℃)
*3: tan δ (120 Hz / +20 ℃)
*4: After 2 minutes
◆ Please refer to each page in this catarog for “Reflow conditions” and “Taping specifications”.

NRFND Not recommended for new design

Frequency correction factor for ripple current

Frequency(f)	120 Hz ≦ f < 1 kHz	1 kHz ≦ f < 10 kHz	10 kHz ≦ f < 100 kHz	100 kHz ≦ f < 500 kHz
Coefficient	0.05	0.3	0.7	1

Design and specifications are each subject to change without notice. Ask factory for the current technical specifications before purchase and/or use.
Should a safety concern arise regarding this product, please be sure to contact us immediately.

Panasonic INDUSTRY

OS-CON

Conductive Polymer Aluminum Solid Capacitors

Surface Mount Type

SVPF series

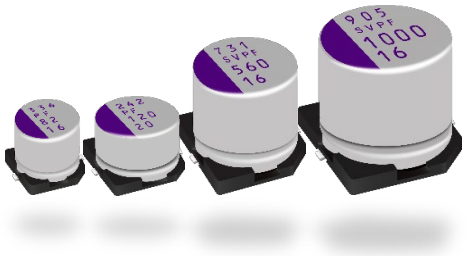

Features

- High voltage (50 V max.)
- Large capacitance (1000 μF max.)
- 105 ℃ 5000 h
- RoHS compliance, Halogen free

Specifications

Size code	B6	C6	E7	E10	E12	F10	F12
Category temp. range	–55 ℃ to +105 ℃						
Rated voltage range (V)	16 to 25	16 to 50		16	16 to 50	16	16 to 50
Nominal cap.range (μF)	27 to 82	10 to 180	18 to 270	560	39 to 560	1000	68 to 1000
Capacitance tolerance	±20 % (120 Hz / +20 ℃)						
DC leakage current	Please see the attached characteristics list						
Dissipation factor (tan δ)	Please see the attached characteristics list						
Endurance	+105 ℃ 5000 h, rated voltage applied						
	Capacitance change	Within ±20 % of the initial value					
	Dissipation factor (tanδ)	≦ 150 % of the initial limit					
	DC leakage current	Within the initial limit					
Damp heat (Steady state)	+60 ℃, 90 % to 95 % RH, 1000 h, No-applied voltage						
	Capacitance change	Within ±20 % of the initial value					
	Dissipation factor (tanδ)	≦ 150 % of the initial limit					
	DC leakage current	Within the initial limit (after voltage processing)					

Marking

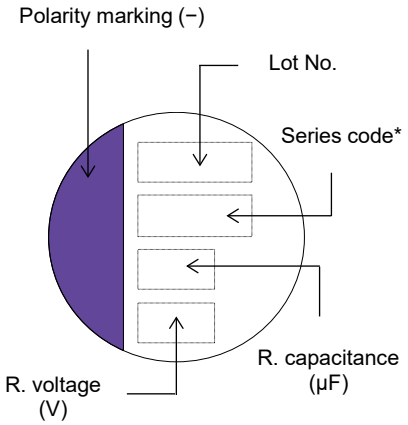

* Depends on the case size.

Dimensions (not to scale)

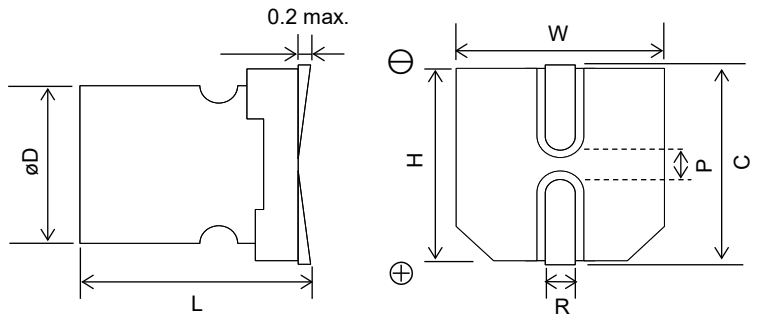

Unit : mm

Size code	øD±0.5	L +0.1 -0.4	W±0.2	H±0.2	C±0.2	R	P*2
B6	5.0	5.9	5.3	5.3	6.0	0.6 to 0.8	1.4
C6	6.3	5.9	6.6	6.6	7.3	0.6 to 0.8	2.1
E7	8.0	6.9	8.3	8.3	9.0	0.6 to 0.8	3.2
E10	8.0	10.0*1	8.3	8.3	9.0	0.8 to 1.1	3.2
E12	8.0	11.9	8.3	8.3	9.0	0.8 to 1.1	3.2
F10	10.0	10.0*1	10.3	10.3	11.0	0.8 to 1.1	4.6
F12	10.0	12.6	10.3	10.3	11.0	0.8 to 1.1	4.6

*1 : ±0.5, *2 : Reference

Design and specifications are each subject to change without notice. Ask factory for the current technical specifications before purchase and/or use.
Should a safety concern arise regarding this product, please be sure to contact us immediately.

Characteristics list

Rated voltage (V)	Rated capacitance (±20 %) (μF)	Case size (mm)		Size code	Specifications				Standard（Reel size : ø380）	
		øD	L		Ripple current*1 (mA rms)	ESR*2 (mΩ max.)	tan δ*3	LC*4 (μA)	Part number	Min. Packaging Q'ty (pcs)
16	82	5.0	5.9	B6	3000	27	0.12	262	16SVPF82M	1500
	180	6.3	5.9	C6	3300	22	0.12	576	16SVPF180M	1000
	270	8.0	6.9	E7	3300	22	0.12	864	16SVPF270M	1000
	560	8.0	10.0	E10	3900	18	0.12	1792	16SVPF560MX	500
		8.0	11.9	E12	4950	14	0.12	1792	16SVPF560M	400
	1000	10.0	10.0	F10	4300	16	0.12	3200	16SVPF1000MX	500
		10.0	12.6	F12	5400	12	0.12	3200	16SVPF1000M	400
20	56	5.0	5.9	B6	2800	30	0.12	224	20SVPF56MX	1500
	120	6.3	5.9	C6	3200	25	0.12	480	20SVPF120M	1000
	180	8.0	6.9	E7	3200	25	0.12	720	20SVPF180M	1000
	390	8.0	11.9	E12	4950	14	0.12	1560	20SVPF390M	400
	560	10.0	12.6	F12	5400	12	0.12	2240	20SVPF560M	400
25	27	5.0	5.9	B6	2450	40	0.12	135	25SVPF27MX	1500
	47	6.3	5.9	C6	2800	30	0.12	235	25SVPF47M	1000
	56	6.3	5.9		2800	30	0.12	280	25SVPF56M	1000
	82	8.0	6.9	E7	3000	28	0.12	410	25SVPF82M	1000
	100	8.0	6.9		3200	24	0.12	500	25SVPF100M	1000
	180	8.0	11.9	E12	4650	16	0.12	900	25SVPF180M	400
	330	10.0	12.6	F12	5000	14	0.12	1650	25SVPF330M	400
35	22	6.3	5.9	C6	2600	35	0.12	154	35SVPF22M	1000
	39	8.0	6.9	E7	2800	30	0.12	273	35SVPF39M	1000
	82	8.0	11.9	E12	4000	20	0.12	574	35SVPF82M	400
	120	10.0	12.6	F12	4400	18	0.12	840	35SVPF120M	400
50	10	6.3	5.9	C6	2500	40	0.12	100	50SVPF10M	1000
	18	8.0	6.9	E7	2700	35	0.12	180	50SVPF18M	1000
	39	8.0	11.9	E12	3800	25	0.12	390	50SVPF39M	400
	68	10.0	12.6	F12	4300	20	0.12	680	50SVPF68M	400

*1: Ripple current (100 kHz / +105 ℃)
*2: ESR (100 kHz to 300 kHz / +20 ℃)
*3: tan δ (120 Hz / +20 ℃)
*4: After 2 minutes
◆ Please refer to each page in this catarog for “Reflow conditions” and “Taping specifications”.

Frequency correction factor for ripple current

Frequency(f)	120 Hz ≦ f < 1 kHz	1 kHz ≦ f < 10 kHz	10 kHz ≦ f < 100 kHz	100 kHz ≦ f < 500 kHz
Coefficient	0.05	0.3	0.7	1

Panasonic INDUSTRY

OS-CON

Conductive Polymer Aluminum Solid Capacitors

Surface Mount Type

SVPA series

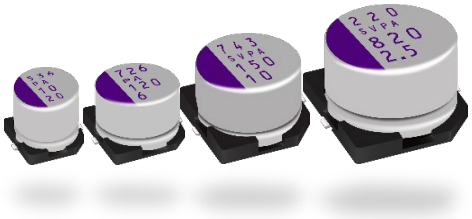

Features

- Low ESR (19 mΩ max.)
- High ripple (4240 mA rms)
- RoHS compliance, Halogen free

Specifications

Size code	B6	C6	E7	F8
Category temp. range	–55 ℃ to +105 ℃			
Rated voltage range	2.5 V to 20 V			2.5 V to 16 V
Nominal cap.range	10 μF to 82 μF	22 μF to 180 μF	47 μF to 330 μF	180 μF to 820 μF
Capacitance tolerance	±20 % (120 Hz / +20 ℃)			
DC leakage current	Please see the attached characteristics list			
Dissipation factor (tan δ)	Please see the attached characteristics list			
Endurance	+105 ℃ 2000 h, rated voltage applied			
	Capacitance change	Within ±20 % of the initial value		
	Dissipation factor (tanδ)	≦ 150 % of the initial limit		
	DC leakage current	Within the initial limit		
Damp heat (Steady state)	+60 ℃, 90 % to 95 % RH, 1000 h, No-applied voltage			
	Capacitance change	Within ±20 % of the initial value		
	Dissipation factor (tanδ)	≦ 150 % of the initial limit		
	DC leakage current	Within the initial limit (after voltage processing)		

Marking

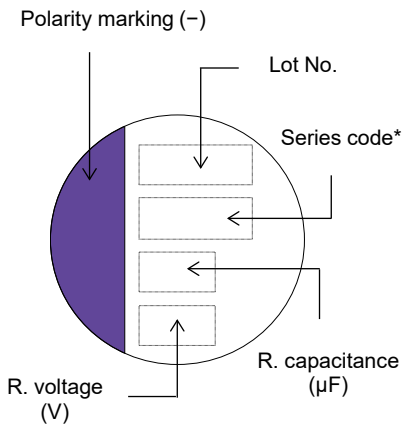

* Depends on the case size.

Dimensions (not to scale)

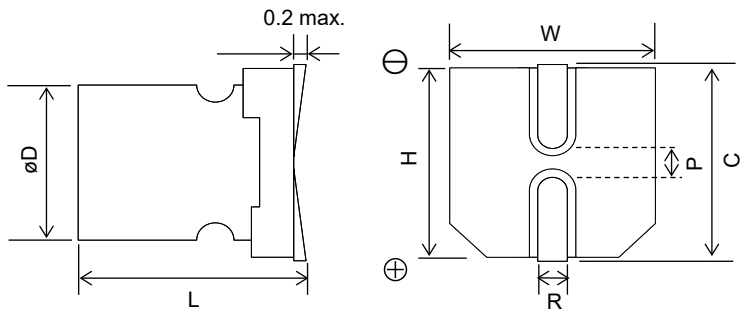

Unit : mm

Size code	øD±0.5	L +0.1 -0.4	W±0.2	H±0.2	C±0.2	R	P*1
B6	5.0	5.9	5.3	5.3	6.0	0.6 to 0.8	1.4
C6	6.3	5.9	6.6	6.6	7.3	0.6 to 0.8	2.1
E7	8.0	6.9	8.3	8.3	9.0	0.6 to 0.8	3.2
F8	10.0	7.9	10.3	10.3	11.0	0.6 to 0.8	4.6

*1 : Reference

Design and specifications are each subject to change without notice. Ask factory for the current technical specifications before purchase and/or use.
Should a safety concern arise regarding this product, please be sure to contact us immediately.

Characteristics list

Rated voltage (V)	Rated capacitance (±20 %) (μF)	Case size (mm)		Size code	Specifications				Standard (Reel size : ø380)	
		øD	L		Ripple current*1 (mA rms)	ESR*2 (mΩ max.)	tan δ*3	LC*4 (μA)	Part number	Min. Packaging Q'ty (pcs)
2.5	82	5.0	5.9	B6	1970	30	0.12	300	2R5SVPA82MAA	1500
	180	6.3	5.9	C6	2690	20	0.12	300	2R5SVPA180MAA	1000
	330	8.0	6.9	E7	3370	20	0.12	500	2R5SVPA330MAA	1000
	820	10.0	7.9	F8	4240	19	0.12	500	2R5SVPA820M	500
4.0	68	5.0	5.9	B6	1970	30	0.12	300	4SVPA68MAA	1500
	150	6.3	5.9	C6	2570	22	0.12	300	4SVPA150MAA	1000
	270	8.0	6.9	E7	3220	22	0.12	500	4SVPA270MAA	1000
	680	10.0	7.9	F8	4130	20	0.12	544	4SVPA680M	500
6.3	47	5.0	5.9	B6	1970	30	0.12	300	6SVPA47MAA	1500
	120	6.3	5.9	C6	2570	22	0.12	300	6SVPA120MAA	1000
	220	8.0	6.9	E7	3220	22	0.12	500	6SVPA220MAA	1000
	470	10.0	7.9	F8	4130	20	0.12	592	6SVPA470M	500
10	68	6.3	5.9	C6	2200	30	0.12	300	10SVPA68MAA	1000
	150	8.0	6.9	E7	2760	30	0.12	500	10SVPA150MAA	1000
	330	10.0	7.9	F8	3770	24	0.12	660	10SVPA330M	500
16	39	6.3	5.9	C6	2040	35	0.12	300	16SVPA39MAA	1000
		6.3	5.9		2460	24	0.12	300	16SVPA39MAAY	1000
	82	8.0	6.9	E7	2760	30	0.12	262	16SVPA82MAA	1000
	180	10.0	7.9	F8	3430	29	0.12	576	16SVPA180M	500
20	10	5.0	5.9	B6	1700	40	0.12	80	20SVPA10M	1500
	22	6.3	5.9	C6	2040	35	0.12	88	20SVPA22M	1000
	47	8.0	6.9	E7	2630	33	0.12	188	20SVPA47M	1000

*1: Ripple current (100 kHz / +105 ℃)
*2: ESR (100 kHz / +20 ℃)
*3: tan δ (120 Hz / +20 ℃)
*4: After 2 minutes
◆ Please refer to each page in this catarog for “Reflow conditions” and “Taping specifications”.

Frequency correction factor for ripple current

Frequency(f)	120 Hz ≦ f < 1 kHz	1 kHz ≦ f < 10 kHz	10 kHz ≦ f < 100 kHz	100 kHz ≦ f < 500 kHz
Coefficient	0.05	0.3	0.7	1

Panasonic INDUSTRY

⚠ This series is not a recommended product.
Not recommended for new design.

OS-CON

Conductive Polymer Aluminum Solid Capacitors

Surface Mount Type

SVPB series

Features

- Low profile (Height 5 mm max.)
- RoHS compliance, Halogen free

Specifications

Size code	C5		C55
Category temp. range	–55 ℃ to +105 ℃		
Rated voltage range	2.5 V to 20 V		20 V
Nominal cap.range	15 µF to 120 µF		22 µF
Capacitance tolerance	±20 % (120 Hz / +20 ℃)		
DC leakage current	Please see the attached characteristics list		
Dissipation factor (tan δ)	Please see the attached characteristics list		
Endurance	+105 ℃ 1000 h, rated voltage applied		
	Capacitance change	Within ±20 % of the initial value (±30 % for C5 size)	
	Dissipation factor (tanδ)	≦ 150 % of the initial limit	
	DC leakage current	Within the initial limit	
Damp heat (Steady state)	+60 ℃, 90 % to 95 % RH, 1000 h, No-applied voltage		
	Capacitance change	Within ±20 % of the initial value	
	Dissipation factor (tanδ)	≦ 150 % of the initial limit	
	DC leakage current	Within the initial limit (after voltage processing)	

Marking

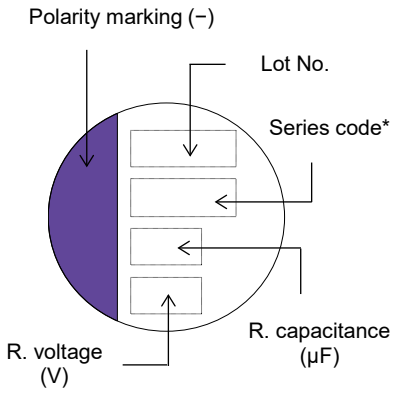

* Depends on the case size.

Dimensions (not to scale)

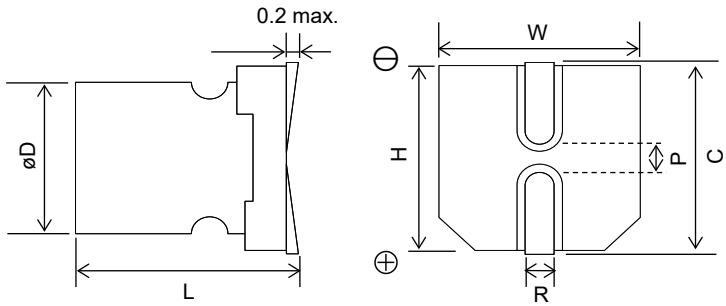

Unit : mm

Size code	øD±0.5	L $^{+0.1}_{-0.4}$	W±0.2	H±0.2	C±0.2	R	P*1
C5	6.3	4.9	6.6	6.6	7.3	0.6 to 0.8	2.1
C55	6.3	5.4	6.6	6.6	7.3	0.6 to 0.8	2.1

*1 : Reference

Characteristics list

Rated voltage (V)	Rated capacitance (±20 %) (μF)	Case size (mm)		Size code	Specifications				Standard（Reel size : ø380）	
		øD	L		Ripple current*1 (mA rms)	ESR*2 (mΩ max.)	tan δ*3	LC*4 (μA)	Part number	Min. Packaging Q'ty (pcs)
2.5	120	6.3	4.9	C5	1670	40	0.12	120	2R5SVPB120M	1300
4.0	100	6.3	4.9		1670	40	0.12	160	4SVPB100M	1300
6.3	82	6.3	4.9		1670	40	0.12	207	6SVPB82M	1300
10	56	6.3	4.9		1670	40	0.12	224	10SVPB56M	1300
16	33	6.3	4.9		1670	40	0.12	211	16SVPB33M	1300
20	15	6.3	4.9		2000	45	0.12	120	20SVPB15M	1300
	22	6.3	5.4	C55	2000	35	0.12	88	20SVPB22M	1000

*1: Ripple current (100 kHz / +105 ℃)
*2: ESR (100 kHz to 300 kHz / +20 ℃)
*3: tan δ (120 Hz / +20 ℃)
*4: After 2 minutes
◆ Please refer to each page in this catarog for “Reflow conditions” and “Taping specifications”.

Frequency correction factor for ripple current

Frequency(f)	120 Hz ≦ f < 1 kHz	1 kHz ≦ f < 10 kHz	10 kHz ≦ f < 100 kHz	100 kHz ≦ f < 500 kHz
Coefficient	0.05	0.3	0.7	1

Design and specifications are each subject to change without notice. Ask factory for the current technical specifications before purchase and/or use.
Should a safety concern arise regarding this product, please be sure to contact us immediately.

Panasonic INDUSTRY

OS-CON

Conductive Polymer Aluminum Solid Capacitors

Surface Mount Type

SVPC series

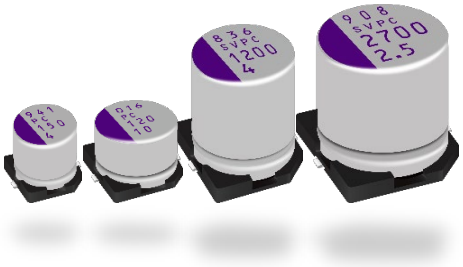

Features

- Low ESR (9 mΩ max.)
- Large capacitance (2700 μF max.)
- RoHS compliance, Halogen free

Specifications

Size code	B6	C6	E7	E12	F12
Category temp. range	–55 ℃ to +105 ℃				
Rated voltage range	2.5 V to 16 V				2.5 V
Nominal cap.range	39 μF to 180 μF	68 μF to 560 μF	120 μF to 680 μF	270 μF to 1500 μF	2700 μF
Capacitance tolerance	±20 % (120 Hz / +20 ℃)				
DC leakage current	Please see the attached characteristics list				
Dissipation factor (tan δ)	Please see the attached characteristics list				

Endurance	+105 ℃ 2000 h, rated voltage applied	
	Capacitance change	Within ±20 % of the initial value
	Dissipation factor (tanδ)	≦ 150 % of the initial limit
	DC leakage current	Within the initial limit
Damp heat (Steady state)	+60 ℃, 90 % to 95 % RH, 1000 h, No-applied voltage	
	Capacitance change	Within ±20 % of the initial value
	Dissipation factor (tanδ)	≦ 150 % of the initial limit
	DC leakage current	Within the initial limit (after voltage processing)

Marking

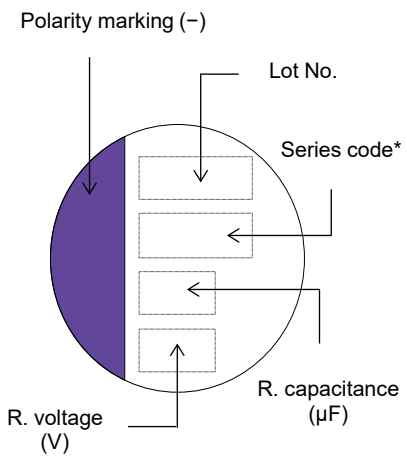

* Depends on the case size.

Dimensions (not to scale)

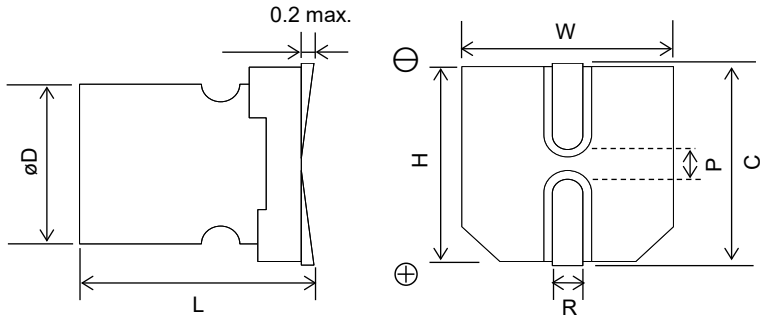

Unit : mm

Size code	øD±0.5	L +0.1 -0.4	W±0.2	H±0.2	C±0.2	R	P*1
B6	5.0	5.9	5.3	5.3	6.0	0.6 to 0.8	1.4
C6	6.3	5.9	6.6	6.6	7.3	0.6 to 0.8	2.1
E7	8.0	6.9	8.3	8.3	9.0	0.6 to 0.8	3.2
E12	8.0	11.9	8.3	8.3	9.0	0.8 to 1.0	3.2
F12	10.0	12.6	10.3	10.3	11.0	0.8 to 1.0	4.6

*1 : Reference

Design and specifications are each subject to change without notice. Ask factory for the current technical specifications before purchase and/or use.
Should a safety concern arise regarding this product, please be sure to contact us immediately.

Characteristics list

Rated voltage (V)	Rated capacitance (±20 %) (μF)	Case size (mm) øD	Case size (mm) L	Size code	Specifications: Ripple current*1 (mA rms)	ESR (mΩ max.) 100 kHz / 20 ℃	ESR (mΩ max.) 300 kHz*2 / 20 ℃	tan δ*3	LC*4 (μA)	Standard (Reel size : ø380): Part number	Min. Packaging Q'ty (pcs)
2.5	180	5.0	5.9	B6	1970	30	26	0.12	300	2R5SVPC180M	1500
		5.0	5.9		2200	24	20	0.12	300	2R5SVPC180MY	1500
		5.0	5.9		2800	19	16	0.12	300	2R5SVPC180MV	1500
	390	6.3	5.9	C6	2410	25	22	0.12	300	2R5SVPC390M	1000
		6.3	5.9		3160	15	13	0.12	300	2R5SVPC390MV	1000
	560	6.3	5.9		3500	16	14	0.12	300	2R5SVPC560M	1000
	680	8.0	6.9	E7	3370	20	17	0.12	500	2R5SVPC680M	1000
	820	8.0	11.9	E12	5380	9	8	0.15	500	2R5SVPC820M	400
	1500	8.0	11.9		5150	10	9	0.15	750	2R5SVPC1500M	400
	2700	10.0	12.6	F12	5070	12	10	0.15	1350	2R5SVPC2700M	400
4.0	150	5.0	5.9	B6	1970	30	26	0.12	300	4SVPC150M	1500
		5.0	5.9		2240	23	20	0.12	300	4SVPC150MY	1500
		5.0	5.9		2730	20	17	0.12	300	4SVPC150MV	1500
	330	6.3	5.9	C6	2320	27	23	0.12	300	4SVPC330M	1000
		6.3	5.9		2630	21	18	0.12	300	4SVPC330MY	1000
		6.3	5.9		3160	15	13	0.12	300	4SVPC330MV	1000
	560	8.0	6.9	E7	3220	22	19	0.12	500	4SVPC560M	1000
		8.0	11.9	E12	5380	9	8	0.15	500	4SVPC560MX	400
	1200	8.0	11.9		4700	12	10	0.15	960	4SVPC1200M	400
	1500	8.0	11.9		4700	12	10	0.15	1200	4SVPC1500M	400
6.3	100	5.0	5.9	B6	1970	30	26	0.12	300	6SVPC100M	1500
		5.0	5.9		2150	25	21	0.12	300	6SVPC100MY	1500
	120	5.0	5.9		2660	21	18	0.12	300	6SVPC120MV	1500
	220	6.3	5.9	C6	2320	27	23	0.12	300	6SVPC220M	1000
		6.3	5.9		3160	15	13	0.12	300	6SVPC220MV	1000
	330	6.3	5.9		3390	17	15	0.12	415	6SVPC330M	1000
	390	8.0	6.9	E7	3220	22	19	0.12	491	6SVPC390M	1000
	820	8.0	11.9	E12	4700	12	10	0.15	1033	6SVPC820M	400
10	68	5.0	5.9	B6	1970	30	26	0.12	300	10SVPC68M	1500
		5.0	5.9		2540	23	20	0.12	300	10SVPC68MV	1500
	120	6.3	5.9	C6	2320	27	23	0.12	300	10SVPC120M	1000
		6.3	5.9		2600	22	19	0.12	300	10SVPC120MV	1000
	270	8.0	6.9	E7	3220	22	19	0.12	500	10SVPC270M	1000
	330	8.0	6.9		3460	19	17	0.12	660	10SVPC330M	1000
16	39	5.0	5.9	B6	1820	35	30	0.12	300	16SVPC39M	1500
		5.0	5.9		2350	27	23	0.12	300	16SVPC39MV	1500
	68	6.3	5.9	C6	2200	30	26	0.12	300	16SVPC68M	1000
		6.3	5.9		2440	25	22	0.12	300	16SVPC68MV	1000
	100	6.3	5.9		2490	24	23	0.12	300	16SVPC100M	1000
	120	8.0	6.9	E7	2900	27	23	0.12	500	16SVPC120M	1000
	150	8.0	6.9		3220	22	21	0.12	500	16SVPC150M	1000
	270	8.0	11.9	E12	4070	16	14	0.15	864	16SVPC270M	400

*1: Ripple current (100 kHz / +105 ℃) *2: Reference value at 300 kHz *3: tan δ (120 Hz / +20 ℃) *4: After 2 minutes

◆ Please refer to each page in this catarog for “Reflow conditions” and “Taping specifications”.

Frequency correction factor for ripple current

Frequency(f)	120 Hz ≦ f < 1 kHz	1 kHz ≦ f < 10 kHz	10 kHz ≦ f < 100 kHz	100 kHz ≦ f < 500 kHz
Coefficient	0.05	0.3	0.7	1

Design and specifications are each subject to change without notice. Ask factory for the current technical specifications before purchase and/or use.
Should a safety concern arise regarding this product, please be sure to contact us immediately.

Panasonic INDUSTRY

⚠ Some part numbers are not a recommended product.
Not recommended for new design.

OS-CON

Conductive Polymer Aluminum Solid Capacitors

Surface Mount Type

SVPD series

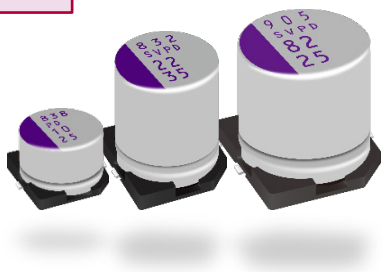

Features

- 125 ℃ 2000 h
- Guaranteed at 85 ℃ 85 %
- RoHS compliance, Halogen free

Specifications

Size code	C6	E7	E12	F8	F12
Category temp. range	–55 ℃ to +125 ℃				
Rated voltage range	10 V to 25 V	16 V to 35 V	25 V to 35 V		
Nominal cap.range	10 µF to 56 µF	8.2 µF to 82 µF	22 µF to 47 µF	18 µF to 39 µF	47 µF to 82 µF
Capacitance tolerance	±20 % (120 Hz / +20 ℃)				
DC leakage current	Please see the attached characteristics list				
Dissipation factor (tan δ)	Please see the attached characteristics list				
Endurance	+125 ℃ 2000 h, rated voltage applied				
	Capacitance change	Within ±20 % of the initial value			
	Dissipation factor (tanδ)	≦ 200 % of the initial limit			
	DC leakage current	Within the initial limit			
Damp heat (Steady state)	+85 °C, 80 % to 90 % RH, 1000 h, rated voltage applied.				
	Capacitance change	Within ±20 % of the initial value			
	Dissipation factor (tanδ)	≦ 200 % of the initial limit			
	DC leakage current	Within the initial limit (after voltage processing)			

Marking

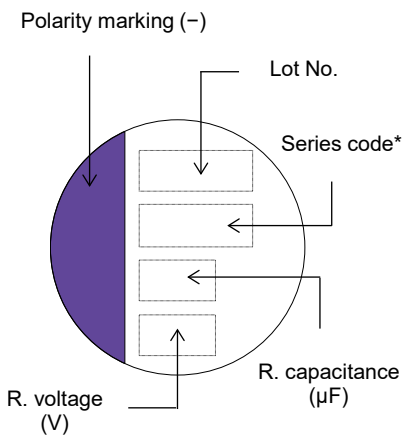

* Depends on the case size.

Dimensions (not to scale)

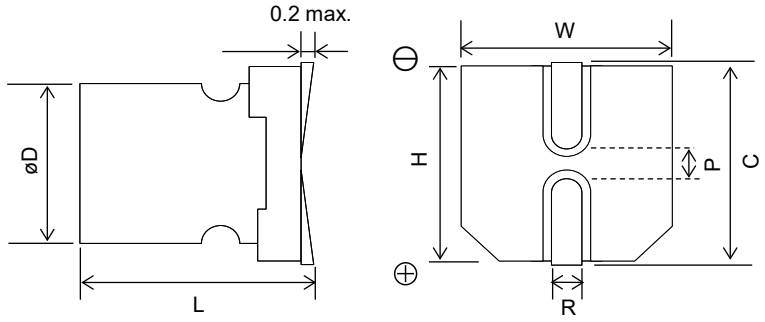

Unit : mm

Size code	øD±0.5	L +0.1 -0.4	W±0.2	H±0.2	C±0.2	R	P*1
C6	6.3	5.9	6.6	6.6	7.3	0.6 to 0.8	2.1
E7	8.0	6.9	8.3	8.3	9.0	0.6 to 0.8	3.2
E12	8.0	11.9	8.3	8.3	9.0	0.8 to 1.1	3.2
F8	10.0	7.9	10.3	10.3	11.0	0.6 to 0.8	4.6
F12	10.0	12.6	10.3	10.3	11.0	0.8 to 1.1	4.6

*1 : Reference

Design and specifications are each subject to change without notice. Ask factory for the current technical specifications before purchase and/or use.
Should a safety concern arise regarding this product, please be sure to contact us immediately.

Characteristics list

Rated voltage (V)	Rated capacitance (±20 %) (μF)	Case size (mm)		Size code	Specifications					Standard (Reel size : ø380)	
		øD	L		Ripple current*1 (mA rms)	Allowable ripple current*1 (mA rms)	ESR*2 (mΩ max.)	tan δ*3	LC*4 (μA)	Part number	Min. Packaging Q'ty (pcs)
10	56	6.3	5.9	C6	538	1700	45	0.12	112	10SVPD56M	1000
16	82	8.0	6.9	E7	670	2120	40	0.12	262	16SVPD82M	1000
25	10	6.3	5.9	C6	474	1500	65	0.10	50	25SVPD10M	1000
	22	8.0	6.9	E7	580	1835	48	0.10	110	25SVPD22M	1000
	39	10.0	7.9	F8	664	2100	45	0.10	195	25SVPD39M	500
	47	8.0	11.9	E12	943	2980	30	0.12	235	25SVPD47M	400
	82	10.0	12.6	F12	1202	3800	28	0.12	410	25SVPD82M	400
35	NRFND 8.2	8.0	6.9	E7	400	1300	70	0.10	57	35SVPD8R2M	1000
	18	10.0	7.9	F8	550	1800	60	0.10	126	35SVPD18M	500
	22	8.0	11.9	E12	700	2300	50	0.12	154	35SVPD22M	400
	47	10.0	12.6	F12	1150	3650	30	0.12	329	35SVPD47M	400

*1: Ripple current (100 kHz / +105 ℃ < Tx ≦ +125 ℃), Allowable ripple current (100 kHz / Tx ≦ +105 ℃)
*2: ESR (100 kHz to 300 kHz / +20 ℃)
*3: tan δ (120 Hz / +20 ℃)
*4: After 2 minutes
◆ Please refer to each page in this catarog for “Reflow conditions” and “Taping specifications”.

NRFND Not recommended for new design

Frequency correction factor for ripple current

Frequency(f)	120 Hz ≦ f < 1 kHz	1 kHz ≦ f < 10 kHz	10 kHz ≦ f < 100 kHz	100 kHz ≦ f < 500 kHz
Coefficient	0.05	0.3	0.7	1

Panasonic INDUSTRY

OS-CON

Conductive Polymer Aluminum Solid Capacitors

Surface Mount Type

SVPE series

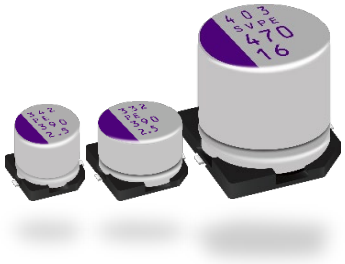

Features

- Low ESR (8 mΩ max.)
- Large capacitance (1200 μF max.)
- RoHS compliance, Halogen free

Specifications

Size code	B6	C6	C10	F12
Category temp. range	–55 ℃ to +105 ℃			
Rated voltage range	2.5 V to 6.3 V	2.5 V to 10 V	2.0 V to 16 V	16 V
Nominal cap.range	150 μF to 390 μF	220 μF to 820 μF	180 μF to 1200 μF	470 μF
Capacitance tolerance	±20 % (120 Hz / +20 ℃)			
DC leakage current	Please see the attached characteristics list			
Dissipation factor (tan δ)	Please see the attached characteristics list			
Endurance	+105 ℃ 2000 h, rated voltage applied			
	Capacitance change	Within ±20 % of the initial value		
	Dissipation factor (tanδ)	≦ 150 % of the initial limit		
	DC leakage current	Within the initial limit		
Damp heat (Steady state)	+60 ℃, 90 % to 95 % RH, 1000 h, No-applied voltage			
	Capacitance change	Within ±20 % of the initial value		
	Dissipation factor (tanδ)	≦ 150 % of the initial limit		
	DC leakage current	Within the initial limit (after voltage processing)		

Marking

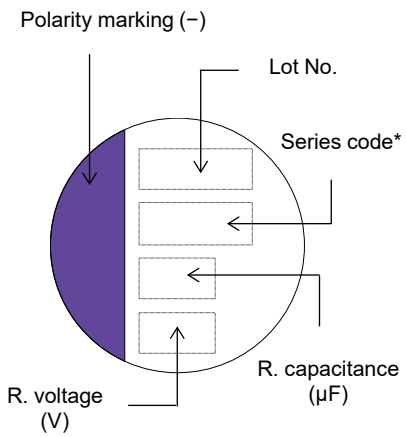

* Depends on the case size.

Dimensions (not to scale)

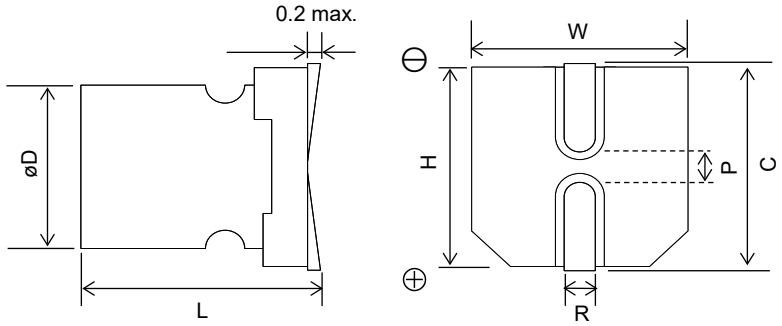

Unit : mm

Size code	øD±0.5	L +0.1 -0.4	W±0.2	H±0.2	C±0.2	R	P*1
B6	5.0	5.9	5.3	5.3	6.0	0.6 to 0.8	1.4
C6	6.3	5.9	6.6	6.6	7.3	0.6 to 0.8	2.1
C10	6.3	9.9	6.6	6.6	7.3	0.6 to 0.8	2.1
F12	10.0	12.6	10.3	10.3	11.0	0.8 to 1.1	4.6

*1 : Reference

Design and specifications are each subject to change without notice. Ask factory for the current technical specifications before purchase and/or use.
Should a safety concern arise regarding this product, please be sure to contact us immediately.

Characteristics list

Rated voltage (V)	Rated capacitance (±20 %) (μF)	Case size (mm)		Size code	Specifications					Standard（Reel size : ø380）	
		øD	L		Ripple current*1 (mA rms)	ESR (mΩ max.) 100 kHz / 20 ℃	ESR (mΩ max.) 300 kHz*2 / 20 ℃	tan δ*3	LC*4 (μA)	Part number	Min. Packaging Q'ty (pcs)
2.0	1200	6.3	9.9	C10	5230	8	8	0.12	500	2SVPE1200M	500
2.5	270	5.0	5.9	B6	3860	10	9	0.12	500	2R5SVPE270M	1500
	330	5.0	5.9		3150	15	13	0.12	500	2R5SVPE330M	1500
		5.0	5.9		3860	10	9	0.12	500	2R5SVPE330MY	1500
	390	5.0	5.9		3860	10	9	0.12	700	2R5SVPE390MX	1500
		6.3	5.9	C6	3900	10	9	0.12	500	2R5SVPE390M	1000
	820	6.3	5.9		3900	10	9	0.12	1020	2R5SVPE820M	1000
6.3	150	5.0	5.9	B6	3520	12	10	0.12	500	6SVPE150M	1500
	180	5.0	5.9		3150	15	13	0.12	500	6SVPE180M	1500
	220	5.0	5.9		3150	15	13	0.12	500	6SVPE220MW	1500
		6.3	5.9	C6	3900	10	9	0.12	500	6SVPE220M	1000
	390	6.3	5.9		3900	10	9	0.12	1220	6SVPE390M	1000
10	220	6.3	5.9		2700	20	18	0.12	500	10SVPE220M	1000
16	180	6.3	9.9	C10	4460	11	10	0.12	576	16SVPE180M	500
	470	10.0	12.6	F12	6100	10	9	0.12	1504	16SVPE470M	400

*1: Ripple current (100 kHz / +105 ℃)
*2: Reference value at 300 kHz
*3: tan δ (120 Hz / +20 ℃)
*4: After 2 minutes
◆ Please refer to each page in this catarog for “Reflow conditions” and “Taping specifications”.

Frequency correction factor for ripple current

Frequency(f)	120 Hz ≦ f < 1 kHz	1 kHz ≦ f < 10 kHz	10 kHz ≦ f < 100 kHz	100 kHz ≦ f < 500 kHz
Coefficient	0.05	0.3	0.7	1

Panasonic INDUSTRY

OS-CON

Conductive Polymer Aluminum Solid Capacitors

Surface Mount Type

SVPS series

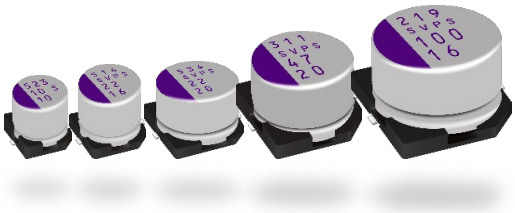

Features

- 105 ℃ 5000 h
- RoHS compliance, Halogen free

Specifications

Size code	A5	B6	C6	E7	F8
Category temp. range	–55 ℃ to +105 ℃				
Rated voltage range	4.0 V to 10 V	4.0 V to 16 V	4.0 V to 20 V	4.0 V to 25 V	4.0 V to 16 V
Nominal cap.range	10 μF to 33 μF	22 μF to 68 μF	22 μF to 150 μF	10 μF to 270 μF	100 μF to 680 μF
Capacitance tolerance	±20 % (120 Hz / +20 ℃)				
DC leakage current	Please see the attached characteristics list				
Dissipation factor (tan δ)	Please see the attached characteristics list				
Endurance	+105 ℃ 5000 h, rated voltage applied (25 V product : 20 V applied)				
	Capacitance change	Within ±20 % of the initial value			
	Dissipation factor (tanδ)	≦ 150 % of the initial limit			
	DC leakage current	Within the initial limit			
Damp heat (Steady state)	+60 ℃, 90 % to 95 % RH, 1000 h, No-applied voltage				
	Capacitance change	Within ±20 % of the initial value			
	Dissipation factor (tanδ)	≦ 150 % of the initial limit			
	DC leakage current	Within the initial limit (after voltage processing)			

Marking

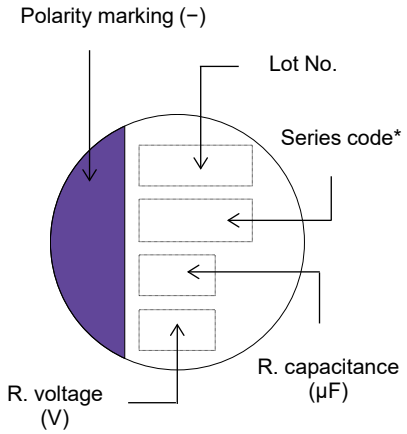

* Depends on the case size.

Dimensions (not to scale)

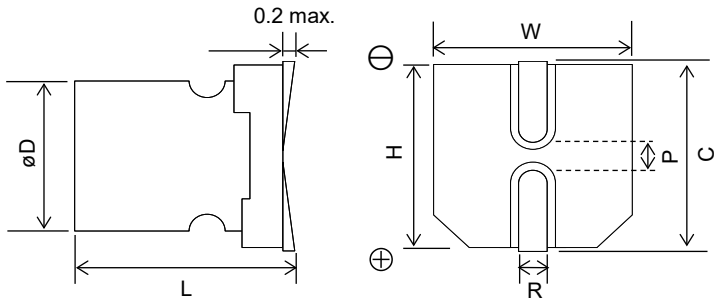

Unit : mm

Size code	øD±0.5	L +0.1 -0.4	W±0.2	H±0.2	C±0.2	R	P*1
A5	4.0	5.4	4.3	4.3	5.0	0.6 to 0.8	1.0
B6	5.0	5.9	5.3	5.3	6.0	0.6 to 0.8	1.4
C6	6.3	5.9	6.6	6.6	7.3	0.6 to 0.8	2.1
E7	8.0	6.9	8.3	8.3	9.0	0.6 to 0.8	3.2
F8	10.0	7.9	10.3	10.3	11.0	0.6 to 0.8	4.6

*1 : Reference

Design and specifications are each subject to change without notice. Ask factory for the current technical specifications before purchase and/or use.
Should a safety concern arise regarding this product, please be sure to contact us immediately.

Characteristics list

Rated voltage (V)	Rated capacitance (±20 %) (μF)	Case size (mm)		Size code	Specifications				Standard (Reel size : ø380)	
		øD	L		Ripple current*1 (mA rms)	ESR*2 (mΩ max.)	tan δ*3	LC*4 (μA)	Part number	Min. Packaging Q'ty (pcs)
4.0	33	4.0	5.4	A5	740	200	0.15	66	4SVPS33M	2000
	68	5.0	5.9	B6	1970	30	0.12	300	4SVPS68M	1500
	150	6.3	5.9	C6	2570	22	0.12	300	4SVPS150M	1000
	270	8.0	6.9	E7	3220	22	0.12	500	4SVPS270M	1000
	680	10.0	7.9	F8	4130	20	0.12	544	4SVPS680M	500
6.3	22	4.0	5.4	A5	740	200	0.12	69.3	6SVPS22M	2000
	47	5.0	5.9	B6	1970	30	0.12	300	6SVPS47M	1500
	120	6.3	5.9	C6	2570	22	0.12	300	6SVPS120M	1000
	220	8.0	6.9	E7	3220	22	0.12	500	6SVPS220M	1000
	470	10.0	7.9	F8	4130	20	0.12	592	6SVPS470M	500
10	10	4.0	5.4	A5	700	220	0.10	50	10SVPS10M	2000
	15	4.0	5.4		740	200	0.10	75	10SVPS15M	2000
	33	5.0	5.9	B6	1100	70	0.12	165	10SVPS33M	1500
	68	6.3	5.9	C6	2200	30	0.12	300	10SVPS68M	1000
	150	8.0	6.9	E7	2760	30	0.12	500	10SVPS150MX	1000
		10.0	7.9	F8	3020	30	0.12	300	10SVPS150M	500
	330	10.0	7.9		3770	24	0.12	660	10SVPS330M	500
16	22	5.0	5.9	B6	1060	90	0.10	176	16SVPS22M	1500
	39	6.3	5.9	C6	2460	24	0.12	300	16SVPS39M	1000
	82	8.0	6.9	E7	2760	30	0.12	262	16SVPS82M	1000
	100	10.0	7.9	F8	2670	35	0.12	320	16SVPS100M	500
	180	10.0	7.9		3430	29	0.12	576	16SVPS180M	500
20	22	6.3	5.9	C6	1450	60	0.10	88	20SVPS22M	1000
	47	8.0	6.9	E7	1890	45	0.12	188	20SVPS47M	1000
25	10	8.0	6.9		1500	60	0.10	125	25SVPS10M	1000

*1: Ripple current (100 kHz / +105 ℃)
: The surface temperature of aluminum case top must not exceed 105 ℃.
A rise in temperature due to self-heating by ripple current should be factored in.
*2: ESR (100 kHz to 300 kHz / +20 ℃)
*3: tan δ (120 Hz / +20 ℃)
*4: After 2 minutes
◆ Please refer to each page in this catarog for “Reflow conditions” and “Taping specifications”.

Frequency correction factor for ripple current

Frequency(f)	120 Hz ≦ f < 1 kHz	1 kHz ≦ f < 10 kHz	10 kHz ≦ f < 100 kHz	100 kHz ≦ f < 500 kHz
Coefficient	0.05	0.3	0.7	1

Panasonic INDUSTRY

OS-CON

Conductive Polymer Aluminum Solid Capacitors

Surface Mount Type

SVQP series

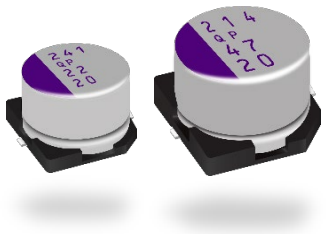

Features

- 125 ℃ 1000 h
- RoHS compliance, Halogen free

Specifications

Size code	C6	E7
Category temp. range	–55 ℃ to +125 ℃	
Rated voltage range	4.0 V to 20 V	6.3 V to 20 V
Nominal cap.range	22 μF to 150 μF	47 μF to 220 μF
Capacitance tolerance	±20 % (120 Hz / +20 ℃)	
DC leakage current	Please see the attached characteristics list	
Dissipation factor (tan δ)	Please see the attached characteristics list	
Endurance	+125 ℃ 1000 h, rated voltage applied	
	Capacitance change	Within ±20 % of the initial value
	Dissipation factor (tanδ)	≦ 200 % of the initial limit
	DC leakage current	Within the initial limit
Damp heat (Steady state)	+60 ℃, 90 % to 95 % RH, 1000 h, No-applied voltage	
	Capacitance change	Within ±20 % of the initial value
	Dissipation factor (tanδ)	≦ 150 % of the initial limit
	DC leakage current	Within the initial limit (after voltage processing)

Marking

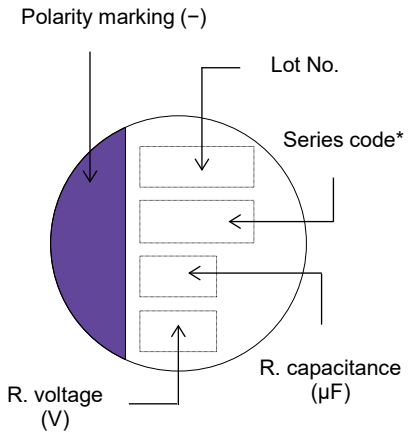

* Depends on the case size.

Dimensions (not to scale)

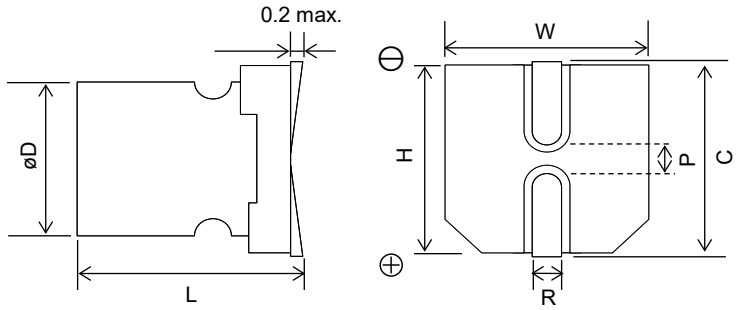

Unit : mm

Size code	øD±0.5	L +0.1 -0.4	W±0.2	H±0.2	C±0.2	R	P*1
C6	6.3	5.9	6.6	6.6	7.3	0.6 to 0.8	2.1
E7	8.0	6.9	8.3	8.3	9.0	0.6 to 0.8	3.2

*1 : Reference value

Design and specifications are each subject to change without notice. Ask factory for the current technical specifications before purchase and/or use.
Should a safety concern arise regarding this product, please be sure to contact us immediately.

Characteristics list

Rated voltage (V)	Rated capacitance (±20 %) (μF)	Case size (mm)		Size code	Specifications					Standard (Reel size : ø380)	
		øD	L		Ripple current*1 (mA rms)	Allowable ripple current*1 (mA rms)	ESR*2 (mΩ max.)	tan δ*3	LC*4 (μA)	Part number	Min. Packaging Q'ty (pcs)
4.0	150	6.3	5.9	C6	572	1810	40	0.12	300	4SVQP150M	1000
6.3	82	6.3	5.9		538	1700	45	0.12	258	6SVQP82M	1000
	100	6.3	5.9		572	1810	40	0.12	315	6SVQP100M	1000
	220	8.0	6.9	E7	810	2560	35	0.12	693	6SVQP220M	1000
10	56	6.3	5.9	C6	538	1700	45	0.12	280	10SVQP56M	1000
	120	8.0	6.9	E7	810	2560	35	0.12	600	10SVQP120M	1000
	150	8.0	6.9		810	2560	35	0.12	750	10SVQP150M	1000
16	39	6.3	5.9	C6	512	1620	50	0.10	312	16SVQP39M	1000
	82	8.0	6.9	E7	670	2120	40	0.12	656	16SVQP82M	1000
20	22	6.3	5.9	C6	459	1450	60	0.10	220	20SVQP22M	1000
	47	8.3	6.9	E7	598	1890	45	0.12	470	20SVQP47M	1000

*1: Ripple current (100 kHz / +105 ℃ < Tx ≦ +125 ℃), Allowable ripple current (100 kHz / Tx ≦ +105 ℃)
*2: ESR (100 kHz to 300 kHz / +20 ℃)
*3: tan δ (120 Hz / +20 ℃)
*4: After 2 minutes
◆ Please refer to each page in this catarog for “Reflow conditions” and “Taping specifications”.

Frequency correction factor for ripple current

Frequency(f)	120 Hz ≦ f < 1 kHz	1 kHz ≦ f < 10 kHz	10 kHz ≦ f < 100 kHz	100 kHz ≦ f < 500 kHz
Coefficient	0.05	0.3	0.7	1

Design and specifications are each subject to change without notice. Ask factory for the current technical specifications before purchase and/or use.
Should a safety concern arise regarding this product, please be sure to contact us immediately.

Panasonic INDUSTRY

OS-CON

Conductive Polymer Aluminum Solid Capacitors

Surface Mount Type

SVP series

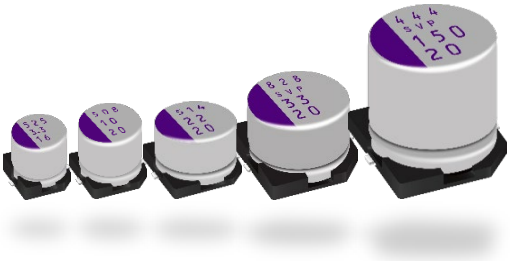

Features

- Standard
- RoHS compliance, Halogen free

Specifications

Size code	A5	B6	C6	E7	E12	F8	F12
Category temp. range	–55 ℃ to +105 ℃						
Rated voltage range (V)	4.0 to 16	4.0 to 20	2.5 to 20	4.0 to 20	2.5 to 20	4.0 to 20	2.5 to 20
Nominal cap.range (μF)	3.3 to 33	10 to 68	22 to 220	33 to 330	100 to 680	56 to 680	150 to 1500
Capacitance tolerance	±20 % (120 Hz / +20 ℃)						
DC leakage current	Please see the attached characteristics list						
Dissipation factor (tan δ)	Please see the attached characteristics list						
Endurance	+105 ℃ 2000 h, rated voltage applied						
	Capacitance change	Within ±20 % of the initial value					
	Dissipation factor (tanδ)	≦ 150 % of the initial limit					
	DC leakage current	Within the initial limit					
Damp heat (Steady state)	+60 ℃, 90 % to 95 % RH, 1000 h, No-applied voltage						
	Capacitance change	Within ±20 % of the initial value					
	Dissipation factor (tanδ)	≦ 150 % of the initial limit					
	DC leakage current	Within the initial limit (after voltage processing)					

Marking

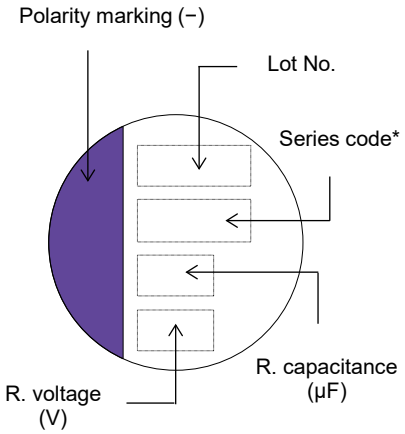

* Depends on the case size.

Dimensions (not to scale)

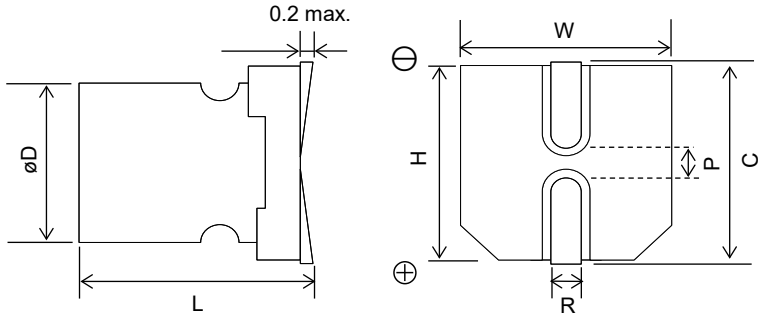

Unit : mm

Size code	øD±0.5	L +0.1 -0.4	W±0.2	H±0.2	C±0.2	R	P*1
A5	4.0	5.4	4.3	4.3	5.0	0.6 to 0.8	1.0
B6	5.0	5.9	5.3	5.3	6.0	0.6 to 0.8	1.4
C6	6.3	5.9	6.6	6.6	7.3	0.6 to 0.8	2.1
E7	8.0	6.9	8.3	8.3	9.0	0.6 to 0.8	3.2
E12	8.0	11.9	8.3	8.3	9.0	0.8 to 1.1	3.2
F8	10.0	7.9	10.3	10.3	11.0	0.6 to 0.8	4.6
F12	10.0	12.6	10.3	10.3	11.0	0.8 to 1.1	4.6

*1 : Reference

Design and specifications are each subject to change without notice. Ask factory for the current technical specifications before purchase and/or use.
Should a safety concern arise regarding this product, please be sure to contact us immediately.

Characteristics list

Rated voltage (V)	Rated capacitance (±20 %) (μF)	Case size (mm)		Size code	Specifications				Standard（Reel size : ø380）	
		øD	L		Ripple current*1 (mA rms)	ESR*2 (mΩ max.)	tan δ*3	LC*4 (μA)	Part number	Min. Packaging Q'ty (pcs)
2.5	220	6.3	5.9	C6	2390	23	0.12	110	2R5SVP220M	1000
	680	8.0	11.9	E12	4520	13	0.15	340	2R5SVP680M	400
	1500	10.0	12.6	F12	5440	12	0.18	750	2R5SVP1500M	400
4.0	33	4.0	5.4	A5	740	200	0.15	66	4SVP33M	2000
	39	5.0	5.9	B6	1100	70	0.12	78	4SVP39M	1500
	68	5.0	5.9		1400	60	0.12	136	4SVP68M	1500
	150	6.3	5.9	C6	1810	40	0.12	120	4SVP150MX	1000
	330	8.0	6.9	E7	2560	35	0.12	264	4SVP330M	1000
	560	8.0	11.9	E12	4520	13	0.15	448	4SVP560M	400
	680	10.0	7.9	F8	3700	25	0.12	544	4SVP680M	500
	1200	10.0	12.6	F12	5440	12	0.18	960	4SVP1200M	400
6.3	22	4.0	5.4	A5	740	200	0.12	69.3	6SVP22M	2000
	47	5.0	5.9	B6	1100	70	0.12	148	6SVP47M	1500
	82	6.3	5.9	C6	1700	45	0.12	103	6SVP82M	1000
	100	6.3	5.9		1810	40	0.12	126	6SVP100M	1000
	120	6.3	5.9		2780	17	0.12	151	6SVP120MV	1000
	220	8.0	6.9	E7	2560	35	0.12	277	6SVP220MX	1000
		10.0	7.9	F8	3700	25	0.12	277	6SVP220M	500
	330	10.0	7.9		3700	25	0.12	416	6SVP330M	500
	470	10.0	7.9		3700	25	0.12	592	6SVP470MX	500
		8.0	11.9	E12	4210	15	0.15	592	6SVP470M	400
	820	10.0	12.6	F12	5440	12	0.15	775	6SVP820M	400
10	4.7	4.0	5.4	A5	670	240	0.08	23.5	10SVP4R7M	2000
	6.8	4.0	5.4		670	240	0.09	34	10SVP6R8M	2000
	10	4.0	5.4		700	220	0.10	50	10SVP10M	2000
	15	4.0	5.4		740	200	0.10	75	10SVP15M	2000
	33	5.0	5.9	B6	1100	70	0.12	165	10SVP33M	1500
	47	6.3	5.9	C6	1620	50	0.12	94	10SVP47M	1000
	56	6.3	5.9		1700	45	0.12	112	10SVP56M	1000
	120	8.0	6.9	E7	2560	35	0.12	240	10SVP120M	1000
	150	8.0	6.9		2560	35	0.12	300	10SVP150MX	1000
		10.0	7.9	F8	3020	30	0.12	300	10SVP150M	500
	270	10.0	7.9		3700	25	0.12	540	10SVP270M	500
	330	10.0	7.9		3700	25	0.12	660	10SVP330MX	500
		8.0	11.9	E12	3950	17	0.15	660	10SVP330M	400
	560	10.0	12.6	F12	5230	13	0.15	840	10SVP560M	400
16	3.3	4.0	5.4	A5	660	260	0.07	26.4	16SVP3R3M	2000
	15	5.0	5.9	B6	1020	120	0.10	120	16SVP15M	1500
	22	5.0	5.9		1060	90	0.10	176	16SVP22M	1500
	39	6.3	5.9	C6	1620	50	0.10	125	16SVP39M	1000
	56	8.0	6.9	E7	1890	45	0.12	179	16SVP56M	1000
	82	8.0	6.9		2120	40	0.12	262	16SVP82M	1000
	100	10.0	7.9	F8	2670	35	0.12	320	16SVP100M	500
	150	10.0	7.9		3020	30	0.12	480	16SVP150M	500
	180	10.0	7.9		3020	30	0.12	576	16SVP180MX	500
		8.0	11.9	E12	3640	20	0.15	576	16SVP180M	400
	330	10.0	12.6	F12	4720	16	0.15	792	16SVP330M	400
20	10	5.0	5.9	B6	1020	120	0.10	100	20SVP10M	1500
	22	6.3	5.9	C6	1450	60	0.10	88	20SVP22M	1000
	27	6.3	5.9		1450	60	0.10	108	20SVP27M	1000
	33	8.0	6.9	E7	1890	45	0.12	132	20SVP33M	1000
	47	8.0	6.9		1890	45	0.12	188	20SVP47M	1000
	56	10.0	7.9	F8	2400	40	0.12	224	20SVP56M	500
	68	10.0	7.9		2400	40	0.12	272	20SVP68M	500
	100	8.0	11.9	E12	3320	24	0.15	400	20SVP100M	400
	150	10.0	12.6	F12	4320	20	0.15	600	20SVP150M	400

*1: Ripple current (100 kHz / +105 ℃)　*2: ESR (100 kHz to 300 kHz/+20 ℃)　*3: tan δ (120 Hz / +20 ℃)　*4: After 2 minutes

◆ Please refer to each page in this catarog for “Reflow conditions” and “Taping specifications”.

Frequency correction factor for ripple current

Frequency(f)	120 Hz ≦ f < 1 kHz	1 kHz ≦ f < 10 kHz	10 kHz ≦ f < 100 kHz	100 kHz ≦ f < 500 kHz
Coefficient	0.05	0.3	0.7	1

Design and specifications are each subject to change without notice. Ask factory for the current technical specifications before purchase and/or use.
Should a safety concern arise regarding this product, please be sure to contact us immediately.

Panasonic INDUSTRY

OS-CON

Conductive Polymer Aluminum Solid Capacitors

Radial Lead Type

SEF series

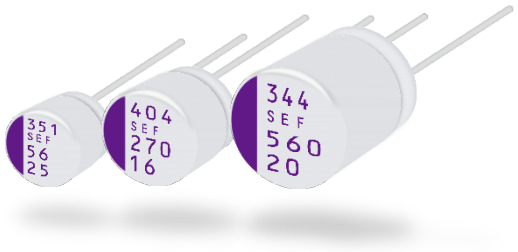

Features

- High voltage (35 V max.)
- Large capacitance (1000 μF max.)
- RoHS compliance, Halogen free

Specifications

Size code	C6	E7	E12	F13
Category temp. range	–55 ℃ to +125 ℃			
Rated voltage range	16 V to 35 V			
Nominal cap.range	22 μF to 180 μF	39 μF to 270 μF	82 μF to 560 μF	120 μF to 1000 μF
Capacitance tolerance	±20 % (120 Hz / +20 ℃)			
DC leakage current	Please see the attached characteristics list			
Dissipation factor (tan δ)	Please see the attached characteristics list			
Endurance	+125 ℃ 1000 h, rated voltage applied			
	Capacitance change	Within ±20 % of the initial value		
	Dissipation factor (tanδ)	≦ 200 % of the initial limit		
	DC leakage current	Within the initial limit		
Damp heat (Steady state)	+60 ℃, 90 % to 95 % RH, 1000 h, No-applied voltage			
	Capacitance change	Within ±20 % of the initial value		
	Dissipation factor (tanδ)	≦ 150 % of the initial limit		
	DC leakage current	Within the initial limit (after voltage processing)		

Marking

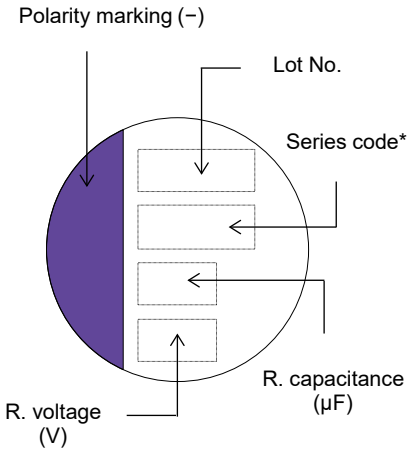

* Depends on the case size.

Dimensions (not to scale)

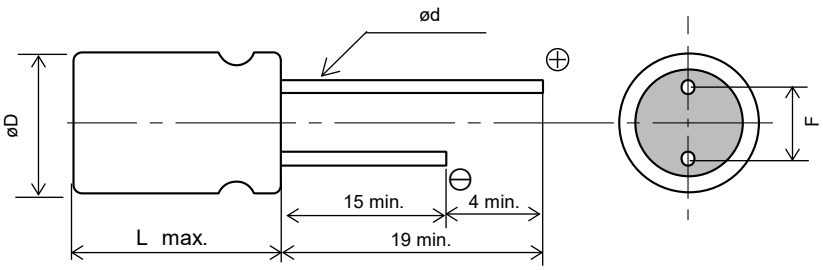

Unit : mm

Size code	øD±0.5	L max.	F±0.5	ød±0.05
C6	6.3	6.0	2.5	0.5
E7	8.0	7.0	3.5	0.5*1
E12	8.0	12.0	3.5	0.6
F13	10.0	13.0	5.0	0.6

*1: 32SEF68M 0.6±0.05

Design and specifications are each subject to change without notice. Ask factory for the current technical specifications before purchase and/or use.
Should a safety concern arise regarding this product, please be sure to contact us immediately.

Characteristics list

Rated voltage (V)	Rated capacitance (±20 %) (μF)	Case size (mm)		Size code	Specifications					Part number
		øD	L		Ripple current*1 (mA rms)	Allowable ripple current*1 (mA rms)	ESR*2 (mΩ max.)	tan δ*3	LC*4 (μA)	Click here for part number list of lead terminal cutting and lead terminal taping
16	180	6.3	6.0	C6	1040	3300	22	0.12	576	16SEF180M
	270	8.0	7.0	E7	1040	3300	22	0.12	864	16SEF270M
	560	8.0	12.0	E12	1560	4950	14	0.12	1792	16SEF560M
	1000	10.0	13.0	F13	1700	5400	12	0.12	3200	16SEF1000M
20	120	6.3	6.0	C6	1010	3200	25	0.12	480	20SEF120M
	180	8.0	7.0	E7	1010	3200	25	0.12	720	20SEF180M
	390	8.0	12.0	E12	1560	4950	14	0.12	1560	20SEF390M
	560	10.0	13.0	F13	1700	5400	12	0.12	2240	20SEF560M
25	56	6.3	6.0	C6	880	2800	30	0.12	280	25SEF56M
	82	8.0	7.0	E7	940	3000	28	0.12	410	25SEF82M
	180	8.0	12.0	E12	1470	4650	16	0.12	900	25SEF180M
	330	10.0	13.0	F13	1580	5000	14	0.12	1650	25SEF330M
32	68	8.0	7.0	E7	1010	3200	25	0.10	435	32SEF68M
35	22	6.3	6.0	C6	820	2600	35	0.12	154	35SEF22M
	39	8.0	7.0	E7	880	2800	30	0.12	273	35SEF39M
	82	8.0	12.0	E12	1260	4000	20	0.12	574	35SEF82M
	120	10.0	13.0	F13	1390	4400	18	0.12	840	35SEF120M

*1: Ripple current (100 kHz / +105 ℃ < Tx ≦ +125 ℃) / Allowable ripple current (100 kHz / Tx ≦ +105 ℃)
*2: ESR（100 kHz to 300 kHz / +20 ℃）
*3: tan δ (120 Hz / +20 ℃)
*4: After 2 minutes
◆ Please refer to each page in this catarog for “Flow conditions” and “Taping specifications”.

Frequency correction factor for ripple current

Frequency(f)	120 Hz ≦ f < 1 kHz	1 kHz ≦ f < 10 kHz	10 kHz ≦ f < 100 kHz	100 kHz ≦ f < 500 kHz
Coefficient	0.05	0.3	0.7	1

Design and specifications are each subject to change without notice. Ask factory for the current technical specifications before purchase and/or use.
Should a safety concern arise regarding this product, please be sure to contact us immediately.

Panasonic INDUSTRY

OS-CON

Conductive Polymer Aluminum Solid Capacitors

Radial Lead Type

SEK series

Features

- High voltage (50 V max.)
- 125 ℃ 1000 h
- RoHS compliance, Halogen free

Specifications

Size code	C6	E7	E12	F13
Category temp. range	–55 ℃ to +125 ℃			
Rated voltage range	25 V to 50 V			
Nominal cap.range	22 μF to 82 μF	33 μF to 120 μF	68 μF to 270 μF	120 μF to 470 μF
Capacitance tolerance	±20 % (120 Hz / +20 ℃)			
DC leakage current	Please see the attached characteristics list			
Dissipation factor (tan δ)	Please see the attached characteristics list			
Endurance	+125 ℃ 1000 h, rated voltage applied			
	Capacitance change	Within ±20 % of the initial value		
	Dissipation factor (tanδ)	≦ 200 % of the initial limit		
	DC leakage current	Within the initial limit		
Damp heat (Steady state)	+60 ℃, 90 % to 95 % RH, 1000 h, No-applied voltage			
	Capacitance change	Within ±20 % of the initial value		
	Dissipation factor (tanδ)	≦ 150 % of the initial limit		
	DC leakage current	Within the initial limit (after voltage processing)		

Marking

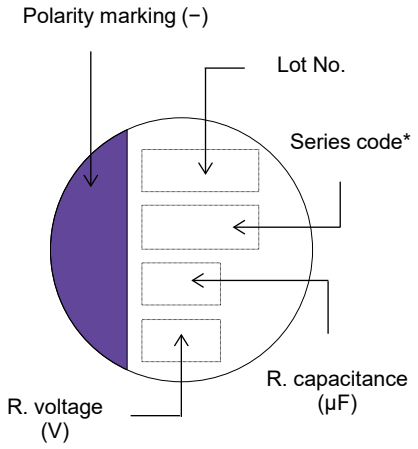

* Depends on the case size.

Dimensions (not to scale)

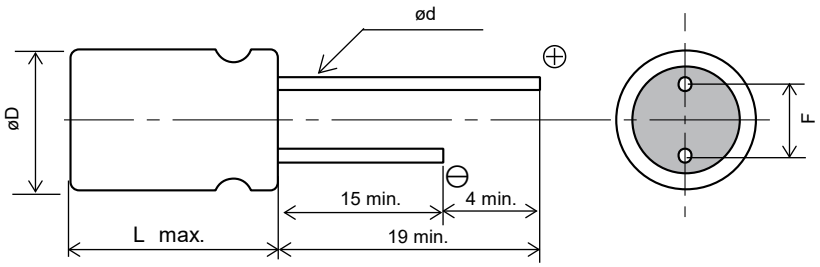

Unit : mm

Size code	øD±0.5	L max.	F±0.5	ød±0.05
C6	6.3	6.0	2.5	0.5
E7	8.0	7.0	3.5	0.5
E12	8.0	12.0	3.5	0.6
F13	10.0	13.0	5.0	0.6

Design and specifications are each subject to change without notice. Ask factory for the current technical specifications before purchase and/or use.
Should a safety concern arise regarding this product, please be sure to contact us immediately.

Characteristics list

Rated voltage (V)	Rated capacitance (±20 %) (μF)	Case size (mm)		Size code	Specifications					Part number
		øD	L		Ripple current*1 (mA rms)	Allowable ripple current*1 (mA rms)	ESR*2 (mΩ max.)	tan δ*3	LC*4 (μA)	Click here for part number list of lead terminal cutting and lead terminal taping
25	82	6.3	6.0	C6	960	3060	25	0.12	410	25SEK82M
	120	8.0	7.0	E7	1010	3200	24	0.12	600	25SEK120M
	270	8.0	12.0	E12	1470	4650	16	0.12	1350	25SEK270M
	470	10.0	13.0	F13	1590	5000	14	0.12	2350	25SEK470M
35	47	6.3	6.0	C6	930	2950	27	0.12	329	35SEK47M
	82	8.0	7.0	E7	960	3060	25	0.12	574	35SEK82M
	180	8.0	12.0	E12	1260	4000	20	0.12	1260	35SEK180M
	330	10.0	13.0	F13	1390	4400	18	0.12	2310	35SEK330M
50	22	6.3	6.0	C6	820	2600	35	0.12	220	50SEK22M
	33	8.0	7.0	E7	850	2700	35	0.12	330	50SEK33M
	68	8.0	12.0	E12	1200	3800	25	0.12	680	50SEK68M
	120	10.0	13.0	F13	1350	4300	20	0.12	1200	50SEK120M

*1: Ripple current (100 kHz / +105 ℃ < Tx ≦ +125 ℃) / Allowable ripple current (100 kHz / Tx ≦ +105 ℃)
*2: ESR (100 kHz to 300 kHz / +20 ℃)
*3: tan δ (120 Hz / +20 ℃)
*4: After 2 minutes
◆ Please refer to each page in this catarog for “Flow conditions” and “Taping specifications”.

Frequency correction factor for ripple current

Frequency(f)	120 Hz ≦ f < 1 kHz	1 kHz ≦ f < 10 kHz	10 kHz ≦ f < 100 kHz	100 kHz ≦ f < 500 kHz
Coefficient	0.05	0.3	0.7	1

Design and specifications are each subject to change without notice. Ask factory for the current technical specifications before purchase and/or use.
Should a safety concern arise regarding this product, please be sure to contact us immediately.

Panasonic INDUSTRY

OS-CON

Conductive Polymer Aluminum Solid Capacitors

Radial Lead Type

SEPG series

Features

- High ripple current (6100 mA rms max.)
- RoHS compliance, Halogen free

Specifications

Size code	B9	C9	C10	E9	E13
Category temp. range	–55 ℃ to +105 ℃				
Rated voltage range	16 V				
Rated cap. range	150 µF	270 µF		470 µF	560 µF
Capacitance tolerance	±20 % (120 Hz / +20 ℃)				
Leakage current	Please see the attached characteristics list				
Dissipation factor (tan δ)	Please see the attached characteristics list				
Endurance	+105 ℃ 5000 h, rated voltage applied				
	Capacitance change	Within ±20 % of the initial value			
	Dissipation factor (tan δ)	≦ 200 % of the initial limit			
	DC leakage current	Within the initial limit			
Damp heat (Steady State)	+60 °C, 90 % to 95 % RH, 1000 h, No-applied voltage				
	Capacitance change	Within ±20 % of the initial value			
	Dissipation factor (tan δ)	≦ 150 % of the initial limit			
	DC leakage current	Within the initial limit (after voltage processing)			

Marking

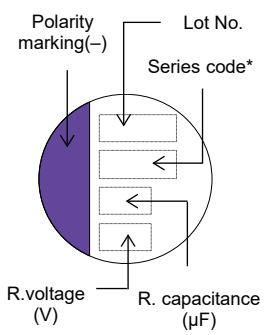

* Depends on the case size.

Dimensions (not to scale)

・E13 size

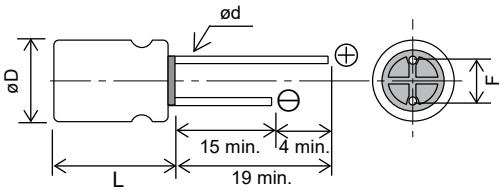

・B9, C9, C10, E9 size

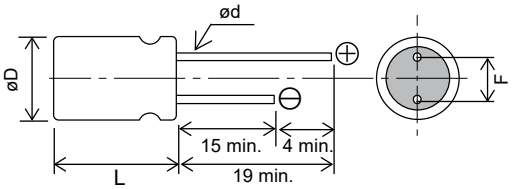

Flat rubber is used for B9, C9, C10, and E9 size.

Unit : mm

Size code	øD±0.5	L max.	F±0.5	ød±0.05
B9	5.0	9.0	2.0	0.6
C9	6.3	9.0	2.5	0.6
C10	6.3	10.0	2.5	0.5
E9	8.0	9.0	3.5	0.6
E13	8.0	13.0	3.5	0.6

Design and specifications are each subject to change without notice. Ask factory for the current technical specifications before purchase and/or use.
Should a safety concern arise regarding this product, please be sure to contact us immediately.

Characteristics list

Rated voltage (V)	Rated capacitance (±20 %) (μF)	Case size (mm)		Size code	Specifications				Part number
		øD	L		Ripple current *1 (mA rms)	ESR*2 (mΩ max.)	tan δ*3	LC*4 (μA)	Click here for part number list of lead terminal cutting and lead terminal taping
16	150	5.0	9.0	B9	4500	12	0.12	480	16SEPG150M
	270	6.3	9.0	C9	5040	10	0.12	864	16SEPG270W
		6.3	10.0	C10	5800	8	0.12	864	16SEPG270M
	470	8.0	9.0	E9	5400	8	0.12	1504	16SEPG470M
	560	8.0	13.0	E13	6100	8	0.12	1792	16SEPG560M

*1: Ripple curren (100 kHz / +105 ℃)
*2: ESR (100 kHz / +20 ℃)
*3: tan δ (120 Hz / +20 ℃)
*4: After 2 minutes
◆ Please refer to each page in this catarog for “Flow conditions” and “Taping specifications”.

Frequency correction factor for ripple current

Frequency(f)	120 Hz ≦ f < 1 kHz	1 kHz ≦ f < 10 kHz	10 kHz ≦ f < 100 kHz	100 kHz ≦ f < 500 kHz
Coefficient	0.05	0.3	0.7	1

Panasonic INDUSTRY

Some part numbers are not a recommended product.
Not recommended for new design.

OS-CON

Conductive Polymer Aluminum Solid Capacitors

Radial Lead Type

SXE series

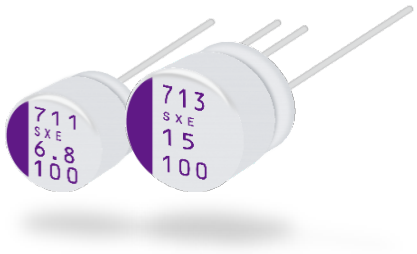

Features

- Super high voltage (100 V max.)
- 125 ℃ 1000 h
- RoHS compliance, Halogen free

Specifications

Size code	E7	E12	F8	F13
Category temp. range	–55 ℃ to +125 ℃			
Rated voltage range	63 V to 100 V			
Nominal cap.range	6.8 μF to 18 μF	15 μF to 68 μF	15 μF to 39 μF	18 μF to 120 μF
Capacitance tolerance	±20 % (120 Hz / +20 ℃)			
DC leakage current	Please see the attached characteristics list			
Dissipation factor (tan δ)	Please see the attached characteristics list			
Endurance	+125 ℃ 1000 h, rated voltage applied			
	Capacitance change	Within ±20 % of the initial value		
	Dissipation factor (tanδ)	≦ 200 % of the initial limit		
	DC leakage current	Within the initial limit		
Damp heat (Steady state)	+60 ℃, 90 % to 95 % RH, 1000 h, No-applied voltage			
	Capacitance change	Within ±20 % of the initial value		
	Dissipation factor (tanδ)	≦ 150 % of the initial limit		
	DC leakage current	Within the initial limit (after voltage processing)		

Marking

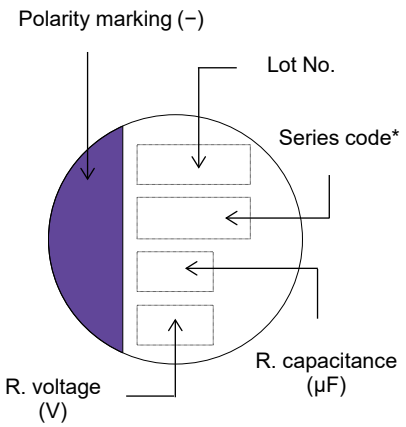

* Depends on the case size.

Dimensions (not to scale)

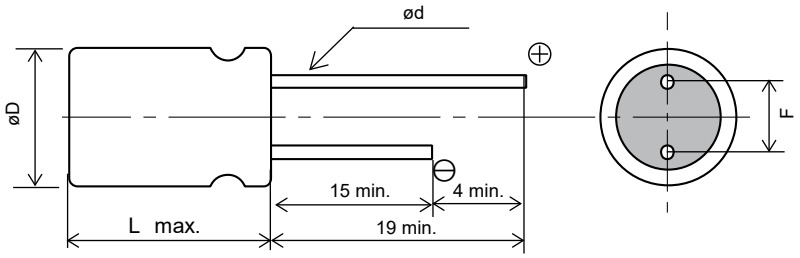

Unit : mm

Size code	øD±0.5	L max.	F±0.5	ød±0.05
E7	8.0	7.0	3.5	0.45
E12	8.0	12.0	3.5	0.6
F8	10.0	8.0	5.0	0.5
F13	10.0	13.0	5.0	0.6

Characteristics list

Rated voltage (V)	Rated capacitance (±20 %) (μF)	Case size (mm) øD	Case size (mm) L	Size code	Specifications: Ripple current*1 (mA rms)	Specifications: Allowable ripple current*1 (mA rms)	Specifications: ESR*2 (mΩ max.)	Specifications: tan δ*3	Specifications: LC*4 (μA)	Part number (Click here for part number list of lead terminal cutting and lead terminal taping)
63	18	8.0	7.0	E7	340	1100	60	0.12	56	63SXE18M
	33	8.0	12.0	E12	930	2950	25	0.12	104	63SXE33M
	39	8.0	12.0	E12	930	2950	25	0.12	122	63SXE39M
NRFND		10.0	8.0	F8	690	2190	50	0.12	122	63SXE39MX
	56	8.0	12.0	E12	930	2950	25	0.12	176	63SXE56M
	68	8.0	12.0	E12	930	2950	25	0.12	214	63SXE68MX
		10.0	13.0	F13	1030	3280	25	0.12	214	63SXE68M
	100	10.0	13.0	F13	1030	3280	25	0.12	315	63SXE100M
	120	10.0	13.0	F13	1030	3280	25	0.12	378	63SXE120M
72	82	10.0	13.0	F13	980	3100	28	0.12	295	72SXE82M
	100	10.0	13.0	F13	980	3100	28	0.12	360	72SXE100M
80	12	8.0	7.0	E7	340	1100	60	0.12	48	80SXE12M
	27	8.0	12.0	E12	780	2490	35	0.12	108	80SXE27M
NRFND		10.0	8.0	F8	660	2080	55	0.12	108	80SXE27MX
	33	8.0	12.0	E12	780	2490	35	0.12	132	80SXE33M
	47	8.0	12.0	E12	780	2490	35	0.12	188	80SXE47MX
		10.0	13.0	F13	980	3100	28	0.12	188	80SXE47M
	56	10.0	13.0	F13	980	3100	28	0.12	224	80SXE56M
	82	10.0	13.0	F13	980	3100	28	0.12	328	80SXE82M
100	6.8	8.0	7.0	E7	340	1100	60	0.12	34	100SXE6R8M
NRFND	15	10.0	8.0	F8	630	2000	60	0.12	75	100SXE15MX
		8.0	12.0	E12	730	2350	40	0.12	75	100SXE15M
	18	10.0	13.0	F13	940	3000	30	0.12	90	100SXE18M
		8.0	12.0	E12	730	2350	40	0.12	90	100SXE18MX
	22	10.0	13.0	F13	940	3000	30	0.12	110	100SXE22M
	27	8.0	12.0	E12	730	2350	40	0.12	135	100SXE27MX
		10.0	13.0	F13	940	3000	30	0.12	135	100SXE27M
	39	10.0	13.0	F13	940	3000	30	0.12	195	100SXE39M

*1: Ripple current (100 kHz / +105 ℃ < Tx ≦ +125 ℃) / Allowable ripple current (100 kHz / Tx ≦ +105 ℃)
*2: ESR (100 kHz to 300 kHz / +20 ℃)
*3: tan δ (120 Hz / +20 ℃)
*4: After 2 minutes
◆ Please refer to each page in this catarog for “Flow conditions” and “Taping specifications”.

NRFND Not recommended for new design

Frequency correction factor for ripple current

Frequency(f)	120 Hz ≦ f < 1 kHz	1 kHz ≦ f < 10 kHz	10 kHz ≦ f < 100 kHz	100 kHz ≦ f < 500 kHz
Coefficient	0.05	0.3	0.7	1

Design and specifications are each subject to change without notice. Ask factory for the current technical specifications before purchase and/or use.
Should a safety concern arise regarding this product, please be sure to contact us immediately.

Panasonic INDUSTRY

OS-CON

Conductive Polymer Aluminum Solid Capacitors

Radial Lead Type

SEPF series

Features

- High voltage (35 V max.)
- Large capacitance (1000 μF max.)
- RoHS compliance, Halogen free

Specifications

Size code	C55	C6	E7	E12	F13
Category temp. range	–55 ℃ to +105 ℃				
Rated voltage range	16 V to 32 V	16 V to 35 V			
Nominal cap.range	22 μF to 150 μF	22 μF to 180 μF	39 μF to 270 μF	82 μF to 560 μF	120 μF to 1000 μF
Capacitance tolerance	±20 % (120 Hz / +20 ℃)				
DC leakage current	Please see the attached characteristics list				
Dissipation factor (tan δ)	Please see the attached characteristics list				
Endurance	+105 ℃ 5000 h, rated voltage applied				
	Capacitance change	Within ±20 % of the initial value			
	Dissipation factor (tanδ)	≦ 150 % of the initial limit			
	DC leakage current	Within the initial limit			
Damp heat (Steady state)	+60 ℃, 90 % to 95 % RH, 1000 h, No-applied voltage				
	Capacitance change	Within ±20 % of the initial value			
	Dissipation factor (tanδ)	≦ 150 % of the initial limit			
	DC leakage current	Within the initial limit (after voltage processing)			

Marking

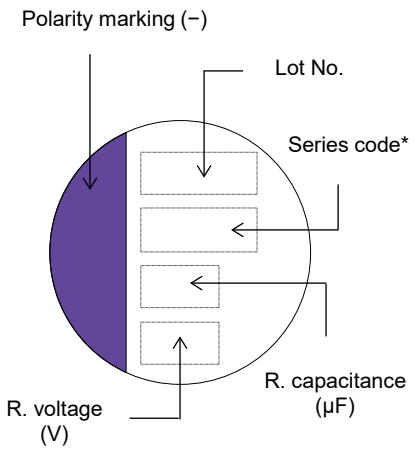

* Depends on the case size.

Dimensions (not to scale)

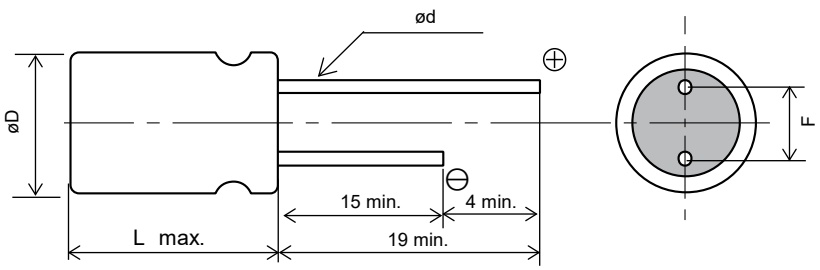

Unit : mm

Size code	øD±0.5	L max.	F±0.5	ød±0.05
C55	6.3	5.5	2.5	0.45
C6	6.3	6.0	2.5	0.5
E7	8.0	7.0	3.5	0.5*1
E12	8.0	12.0	3.5	0.6
F13	10.0	13.0	5.0	0.6

*1: 32SEPF68M : 0.6±0.05

Design and specifications are each subject to change without notice. Ask factory for the current technical specifications before purchase and/or use.
Should a safety concern arise regarding this product, please be sure to contact us immediately.

Characteristics list

Rated voltage (V)	Rated capacitance (±20 %) (μF)	Case size (mm) øD	Case size (mm) L	Size code	Specifications Ripple current *1 (mA rms)	Specifications ESR*2 (mΩ max.)	Specifications tan δ*3	Specifications LC*4 (μA)	Part number Click here for part number list of lead terminal cutting and lead terminal taping
16	150	6.3	5.5	C55	2590	30	0.12	480	16SEPF150M
	180	6.3	6.0	C6	3300	22	0.12	576	16SEPF180M
	270	8.0	7.0	E7	3300	22	0.12	864	16SEPF270M
	560	8.0	12.0	E12	4950	14	0.12	1792	16SEPF560M
	1000	10.0	13.0	F13	5400	12	0.12	3200	16SEPF1000M
20	120	6.3	6.0	C6	3200	25	0.12	480	20SEPF120M
	180	8.0	7.0	E7	3200	25	0.12	720	20SEPF180M
	390	8.0	12.0	E12	4950	14	0.12	1560	20SEPF390M
	560	10.0	13.0	F13	5400	12	0.12	2240	20SEPF560M
25	56	6.3	6.0	C6	2800	30	0.12	280	25SEPF56M
	82	8.0	7.0	E7	3000	28	0.12	410	25SEPF82M
	180	8.0	12.0	E12	4650	16	0.12	900	25SEPF180M
	330	10.0	13.0	F13	5000	14	0.12	1650	25SEPF330M
32	22	6.3	5.5	C55	2400	35	0.12	140	32SEPF22M
	68	8.0	7.0	E7	3200	25	0.10	435	32SEPF68M
35	22	6.3	6.0	C6	2600	35	0.12	154	35SEPF22M
	39	8.0	7.0	E7	2800	30	0.12	273	35SEPF39M
	82	8.0	12.0	E12	4000	20	0.12	574	35SEPF82M
	120	10.0	13.0	F13	4400	18	0.12	840	35SEPF120M

*1: Ripple current (100 kHz / +105 ℃)
*2: ESR (100 kHz to 300 kHz / +20 ℃)
*3: tan δ (120 Hz / +20 ℃)
*4: After 2 minutes
◆ Please refer to each page in this catarog for “Flow conditions” and “Taping specifications”.

Frequency correction factor for ripple current

Frequency(f)	120 Hz ≦ f < 1 kHz	1 kHz ≦ f < 10 kHz	10 kHz ≦ f < 100 kHz	100 kHz ≦ f < 500 kHz
Coefficient	0.05	0.3	0.7	1

Panasonic INDUSTRY

OS-CON

Conductive Polymer Aluminum Solid Capacitors

Radial Lead Type

SEPC series

Features

- Super low ESR (5 mΩ max.)
- Large capacitance (2700 μF max.)
- RoHS compliance, Halogen free

Specifications

Size code	B9	C55	C6	C9	E7	E9	E12	E13	F13
Category temp. range	–55 ℃ to +105 ℃								
Rated voltage range (V)	2.5	6.3	2.5 to 16		6.3 to 16	2.5 to 16	16	2.5 to 6.3	2.5 to 16
Nominal cap.range (μF)	100 to 560	220	100 to 560	100 to 820	150 to 1000	180 to 1000	180 to 270	470 to 820	470 to 2700
Capacitance tolerance	±20 % (120 Hz / +20 ℃)								
DC leakage current	Please see the attached characteristics list								
Dissipation factor (tan δ)	Please see the attached characteristics list								
Endurance	+105 ℃ 5000 h, rated voltage applied								
	Capacitance change	Within ±20 % of the initial value							
	Dissipation factor (tanδ)	≦ 150 % of the initial limit							
	DC leakage current	Within the initial limit							
Damp heat (Steady state)	+60 ℃, 90 % to 95 % RH, 1000 h, No-applied voltage								
	Capacitance change	Within ±20 % of the initial value							
	Dissipation factor (tanδ)	≦ 150 % of the initial limit							
	DC leakage current	Within the initial limit (after voltage processing)							

Marking

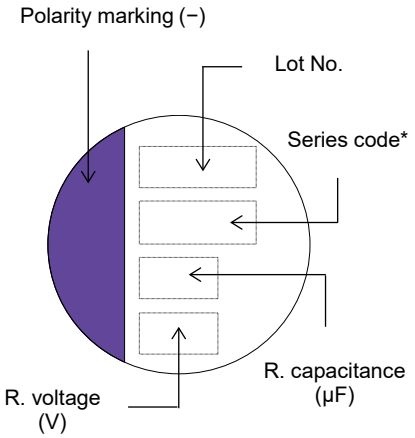

* Depends on the case size.

Dimensions (not to scale)

・E12, E13, F13 size

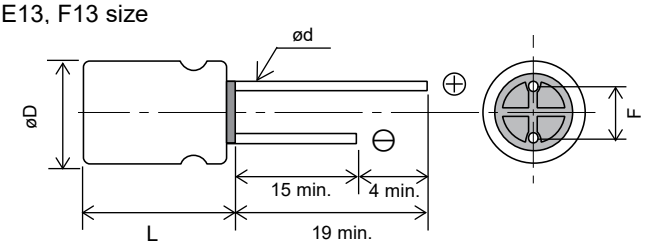

・B9, C55, C6, C9, E7, E9 size

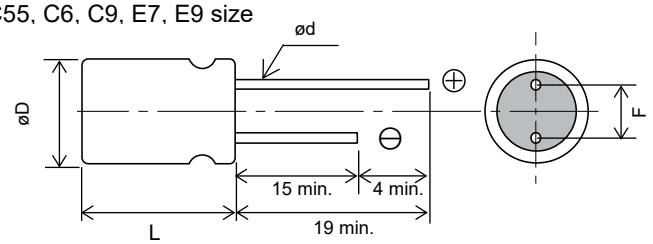

Flat rubber is used for B9, C55, C6, C9, E7, and E9 size.

Unit : mm

Size code	øD±0.5	L max.	F±0.5	ød±0.05
B9	5.0	9.0	2.0	0.6
C55	6.3	5.5	2.5	0.45
C6	6.3	6.0	2.5	0.5 *1
C9	6.3	9.0	2.5	0.6
E7	8.0	7.0	3.5	0.6 *2
E9	8.0	9.0	3.5	0.6
E12	8.0	12.0	3.5	0.6
E13	8.0	13.0	3.5	0.6
F13	10.0	13.0	5.0	0.6

*1: 16SEPC100M : 0.45±0.05
*2: 16SEPC150MD、10SEPC270M : 0.45±0.05

Design and specifications are each subject to change without notice. Ask factory for the current technical specifications before purchase and/or use.
Should a safety concern arise regarding this product, please be sure to contact us immediately.

Characteristics list

Rated voltage (V)	Rated capacitance (±20 %) (μF)	Case size (mm) øD	Case size (mm) L	Size code	Specifications: Ripple current *1 (mA rms)	Specifications: ESR*2 (mΩ max.)	Specifications: tan δ*3	Specifications: LC*4 (μA)	Part number (Click here for part number list of lead terminal cutting and lead terminal taping)
2.5	100	5.0	9.0	B9	4180	7	0.10	500	2SEPC100MZ
	330	5.0	9.0		4180	7	0.10	500	2SEPC330MZ
	390	6.3	6.0	C6	3900	10	0.12	500	2SEPC390M
	470	5.0	9.0	B9	4180	7	0.10	500	2SEPC470MZ
	560	5.0	9.0		4180	7	0.10	500	2SEPC560MZ
		6.3	6.0	C6	3900	10	0.12	500	2SEPC560M
		6.3	9.0	C9	5600	7	0.10	500	2SEPC560MW
		8.0	9.0	E9	4700	8	0.10	280	2SEPC560MX
	820	6.3	9.0	C9	5600	7	0.10	500	2SEPC820MW
		8.0	7.0	E7	5300	8	0.10	500	2SEPC820MD
		8.0	9.0	E9	6100	7	0.10	500	2SEPC820MX
		8.0	9.0		7200	5	0.10	500	2SEPC820MY
		8.0	13.0	E13	6100	7	0.10	500	2R5SEPC820M
	1000	8.0	9.0	E9	6100	7	0.10	500	2SEPC1000MX
	2700	10.0	13.0	F13	5560	10	0.10	1350	2SEPC2700M
4.0	560	6.3	9.0	C9	5600	7	0.10	500	4SEPC560MW
		8.0	9.0	E9	6100	7	0.10	500	4SEPC560MX
		8.0	13.0	E13	6100	7	0.10	500	4SEPC560M
	680	8.0	13.0		6100	7	0.10	544	4SEPC680M
	820	10.0	13.0	F13	6640	7	0.10	656	4SEPC820M
6.3	220	6.3	5.5	C55	2980	18	0.12	280	6SEPC220M
	470	6.3	9.0	C9	5600	7	0.10	592	6SEPC470MW
		8.0	9.0	E9	5700	8	0.10	592	6SEPC470MX
		8.0	13.0	E13	5700	8	0.10	592	6SEPC470M
	560	6.3	9.0	C9	5600	7	0.10	705	6SEPC560MW
		8.0	9.0	E9	6100	7	0.10	705	6SEPC560MX
	680	10.0	13.0	F13	6640	7	0.10	857	6SEPC680M
	1000	8.0	7.0	E7	3530	18	0.10	1260	6SEPC1000MD
	1500	10.0	13.0	F13	5560	10	0.10	1890	6SEPC1500M
10	270	8.0	7.0	E7	3220	22	0.12	500	10SEPC270MD
16	100	6.3	6.0	C6	2490	24	0.10	320	16SEPC100M
		6.3	9.0	C9	4680	10	0.10	500	16SEPC100MW
	150	8.0	7.0	E7	3220	22	0.12	500	16SEPC150MD
	180	8.0	9.0	E9	5000	10	0.10	576	16SEPC180MX
		8.0	12.0	E12	4360	16	0.10	576	16SEPC180M
	220	8.0	7.0	E7	4150	13	0.10	500	16SEPC220MD
	270	8.0	9.0	E9	5000	10	0.10	864	16SEPC270MX
		8.0	12.0	E12	5000	11	0.10	864	16SEPC270M
	470	10.0	13.0	F13	6100	10	0.10	1504	16SEPC470M

*1: Ripple current (100 kHz / +105 ℃)
*2: ESR (100 kHz to 300 kHz / +20 ℃)
*3: tan δ (120 Hz / +20 ℃)
*4: After 2 minutes
◆ Please refer to each page in this catarog for “Flow conditions” and “Taping specifications”.

Frequency correction factor for ripple current

Frequency(f)	120 Hz ≦ f < 1 kHz	1 kHz ≦ f < 10 kHz	10 kHz ≦ f < 100 kHz	100 kHz ≦ f < 500 kHz
Coefficient	0.05	0.3	0.7	1

Design and specifications are each subject to change without notice. Ask factory for the current technical specifications before purchase and/or use.
Should a safety concern arise regarding this product, please be sure to contact us immediately.

Panasonic INDUSTRY

OS-CON

Conductive Polymer Aluminum Solid Capacitors

Radial Lead Type

SEQP series

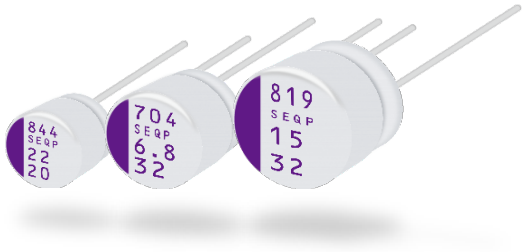

Features

- High voltage (32 V max.)
- 125 ℃ 1000 h
- RoHS compliance, Halogen free

Specifications

Size code	C6	E7	E12	F8	F13
Category temp. range	–55 ℃ to +125 ℃				
Rated voltage range	4.0 V to 20 V	4.0 V to 32 V			4.0 V to 20 V
Nominal cap.range	22 µF to 150 µF	6.8 µF to 330 µF	18 µF to 560 µF	15 µF to 680 µF	150 µF to 1200 µF
Capacitance tolerance	±20 % (120 Hz / +20 ℃)				
DC leakage current	Please see the attached characteristics list				
Dissipation factor (tan δ)	Please see the attached characteristics list				
Endurance	+125 ℃ 1000 h / +105 ℃ 5000 h, rated voltage applied				
	Capacitance change	Within ±20 % of the initial value			
	Dissipation factor (tanδ)	≦ 200 % of the initial limit			
	DC leakage current	Within the initial limit			
Damp heat (Steady state)	+60 ℃, 90 % to 95 % RH, 1000 h, No-applied voltage				
	Capacitance change	Within ±20 % of the initial value			
	Dissipation factor (tanδ)	≦ 150 % of the initial limit			
	DC leakage current	Within the initial limit (after voltage processing)			

Marking

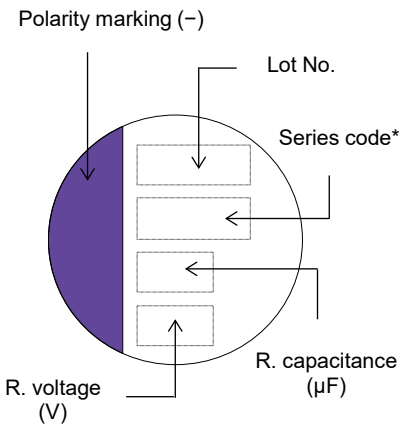

* Depends on the case size.

Dimensions (not to scale)

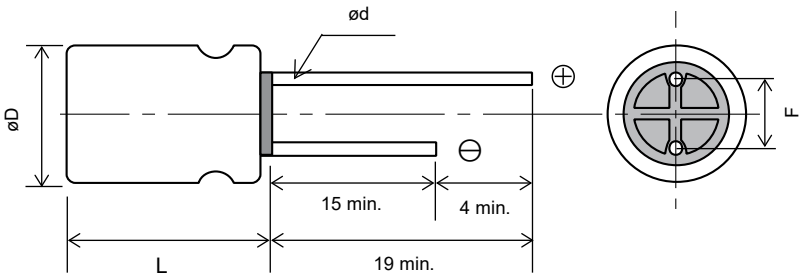

Unit : mm

Size code	øD±0.5	L max.	F±0.5	ød±0.05
C6	6.3	6.0	2.5	0.45
E7	8.0	7.0	3.5	0.45
E12	8.0	12.0	3.5	0.6
F8	10.0	8.0	5.0	0.5
F13	10.0	13.0	5.0	0.6

Design and specifications are each subject to change without notice. Ask factory for the current technical specifications before purchase and/or use.
Should a safety concern arise regarding this product, please be sure to contact us immediately.

Characteristics list

Rated voltage (V)	Rated capacitance (±20 %) (μF)	Case size (mm) øD	Case size (mm) L	Size code	Specifications: Ripple current*1 (mA rms)	Allowable ripple current*1 (mA rms)	ESR*2 (mΩ max.)	tan δ*3	LC*4 (μA)	Part number: Click here for part number list of lead terminal cutting and lead terminal taping
4.0	150	6.3	6.0	C6	572	1810	40	0.12	300	4SEQP150M
	330	8.0	7.0	E7	810	2560	35	0.12	660	4SEQP330M
	560	8.0	12.0	E12	1430	4520	13	0.15	448	4SEQP560M
	680	10.0	8.0	F8	1170	3700	25	0.12	544	4SEQP680M
	1200	10.0	13.0	F13	1721	5440	12	0.18	960	4SEQP1200M
6.3	82	6.3	6.0	C6	537	1700	45	0.12	258	6SEQP82M
	150	8.0	7.0	E7	810	2560	35	0.12	472	6SEQP150M
	330	10.0	8.0	F8	1170	3700	25	0.12	416	6SEQP330M
	470	8.0	12.0	E12	1332	4210	15	0.15	592	6SEQP470M
	820	10.0	13.0	F13	1721	5440	12	0.15	775	6SEQP820M
10	56	6.3	6.0	C6	537	1700	45	0.12	280	10SEQP56M
	120	8.0	7.0	E7	810	2560	35	0.12	600	10SEQP120M
	270	10.0	8.0	F8	1170	3700	25	0.12	540	10SEQP270M
	330	8.0	12.0	E12	1250	3950	17	0.15	660	10SEQP330M
	560	10.0	13.0	F13	1655	5230	13	0.15	840	10SEQP560M
16	39	6.3	6.0	C6	512	1620	50	0.10	312	16SEQP39M
	82	8.0	7.0	E7	670	2120	40	0.12	656	16SEQP82M
	150	10.0	8.0	F8	955	3020	30	0.12	480	16SEQP150M
	180	8.0	12.0	E12	1151	3640	20	0.15	576	16SEQP180M
	330	10.0	13.0	F13	1493	4720	16	0.15	792	16SEQP330M
20	22	6.3	6.0	C6	458	1450	60	0.10	220	20SEQP22M
	47	8.0	7.0	E7	598	1890	45	0.12	470	20SEQP47M
	68	10.0	8.0	F8	759	2400	40	0.12	272	20SEQP68M
	100	8.0	12.0	E12	1050	3320	24	0.15	400	20SEQP100M
	150	10.0	13.0	F13	1367	4320	20	0.15	600	20SEQP150M
32	6.8	8.0	7.0	E7	440	1400	100	0.10	44	32SEQP6R8M
	15	10.0	8.0	F8	560	1800	80	0.10	96	32SEQP15M
	18	8.0	12.0	E12	790	2500	50	0.12	115	32SEQP18M

*1: Ripple current (100 kHz / +105 ℃ < Tx ≦ +125 ℃) / Allowable ripple current (100 kHz / Tx ≦ +105 ℃)
*2: ESR（100 kHz to 300 kHz / +20 ℃）
*3: tan δ (120 Hz / +20 ℃)
*4: After 2 minutes
◆ Please refer to each page in this catarog for “Flow conditions” and “Taping specifications”.

Frequency correction factor for ripple current

Frequency(f)	120 Hz ≦ f < 1 kHz	1 kHz ≦ f < 10 kHz	10 kHz ≦ f < 100 kHz	100 kHz ≦ f < 500 kHz
Coefficient	0.05	0.3	0.7	1

Design and specifications are each subject to change without notice. Ask factory for the current technical specifications before purchase and/or use.
Should a safety concern arise regarding this product, please be sure to contact us immediately.

Panasonic INDUSTRY

OS-CON

Conductive Polymer Aluminum Solid Capacitors

Radial Lead Type

SEP series

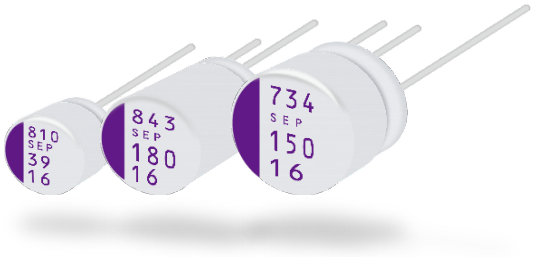

Features

- Standard
- 105 ℃ 3000 h
- RoHS compliance, Halogen free

Specifications

Size code	C6	E7	E12	F8	F13
Category temp. range	–55 ℃ to +105 ℃				
Rated voltage range	4.0 V to 20 V		2.5 V to 20 V	4.0 V to 20 V	2.5 V to 20 V
Nominal cap.range	22 μF to 150 μF	33 μF to 330 μF	100 μF to 680 μF	56 μF to 680 μF	150 μF to 1500 μF
Capacitance tolerance	±20 % (120 Hz / +20 ℃)				
DC leakage current	Please see the attached characteristics list				
Dissipation factor (tan δ)	Please see the attached characteristics list				
Endurance	+105 ℃ 3000 h, rated voltage applied (2.5 V products : 2000 h)				
	Capacitance change	Within ±20 % of the initial value			
	Dissipation factor (tanδ)	≦ 150 % of the initial limit			
	DC leakage current	Within the initial limit			
Damp heat (Steady state)	+60 ℃, 90 % to 95 % RH, 1000 h, No-applied voltage				
	Capacitance change	Within ±20 % of the initial value			
	Dissipation factor (tanδ)	≦ 150 % of the initial limit			
	DC leakage current	Within the initial limit (after voltage processing)			

Marking

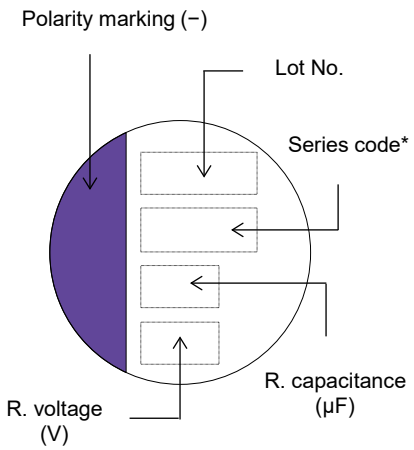

* Depends on the case size.

Dimensions (not to scale)

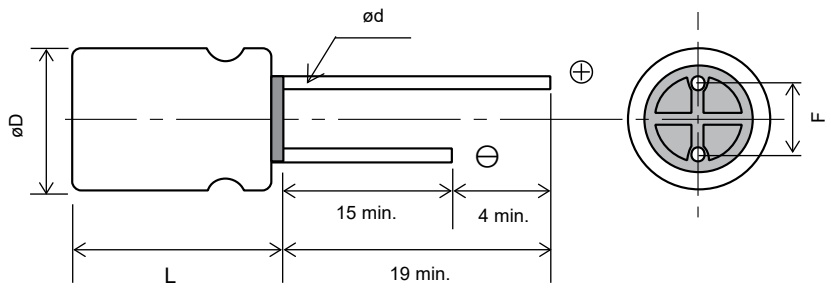

Unit : mm

Size code	øD±0.5	L max.	F±0.5	ød±0.05
C6	6.3	6.0	2.5	0.45
E7	8.0	7.0	3.5	0.45
E12	8.0	12.0	3.5	0.6
F8	10.0	8.0	5.0	0.5
F13	10.0	13.0	5.0	0.6

Design and specifications are each subject to change without notice. Ask factory for the current technical specifications before purchase and/or use.
Should a safety concern arise regarding this product, please be sure to contact us immediately.

Characteristics list

Rated voltage (V)	Rated capacitance (±20 %) (μF)	Case size (mm) øD	Case size (mm) L	Size code	Specifications Ripple current *1 (mA rms)	Specifications ESR*2 (mΩ max.)	Specifications tan δ*3	Specifications LC*4 (μA)	Part number Click here for part number list of lead terminal cutting and lead terminal taping
2.5	680	8.0	12.0	E12	4520	13	0.15	340	2R5SEP680M
	1500	10.0	13.0	F13	5440	12	0.18	750	2R5SEP1500M
4.0	100	6.3	6.0	C6	1810	40	0.12	200	4SEP100M
	150	6.3	6.0		1810	40	0.12	300	4SEP150M
	220	8.0	7.0	E7	2560	35	0.12	440	4SEP220M
	330	8.0	7.0		2560	35	0.12	660	4SEP330M
	470	10.0	8.0	F8	3700	25	0.12	376	4SEP470M
	560	8.0	12.0	E12	4520	13	0.15	448	4SEP560M
	680	10.0	8.0	F8	3700	25	0.12	544	4SEP680M
	1200	10.0	13.0	F13	5440	12	0.18	960	4SEP1200M
6.3	82	6.3	6.0	C6	1700	45	0.12	258	6SEP82M
	150	8.0	7.0	E7	2560	35	0.12	472	6SEP150M
	330	10.0	8.0	F8	3700	25	0.12	416	6SEP330M
	470	8.0	12.0	E12	4210	15	0.15	592	6SEP470M
	820	10.0	13.0	F13	5440	12	0.15	775	6SEP820M
10	56	6.3	6.0	C6	1700	45	0.12	280	10SEP56M
	120	8.0	7.0	E7	2560	35	0.12	600	10SEP120M
	270	10.0	8.0	F8	3700	25	0.12	540	10SEP270M
	330	8.0	12.0	E12	3950	17	0.15	660	10SEP330M
	560	10.0	13.0	F13	5230	13	0.15	840	10SEP560M
16	39	6.3	6.0	C6	1620	50	0.10	312	16SEP39M
	82	8.0	7.0	E7	2120	40	0.12	656	16SEP82M
	150	10.0	8.0	F8	3020	30	0.12	480	16SEP150M
	180	8.0	12.0	E12	3640	20	0.15	576	16SEP180M
	330	10.0	13.0	F13	4720	16	0.15	792	16SEP330M
20	22	6.3	6.0	C6	1450	60	0.10	220	20SEP22M
	33	8.0	7.0	E7	1890	45	0.12	330	20SEP33M
	47	8.0	7.0		1890	45	0.12	470	20SEP47M
	56	10.0	8.0	F8	2400	40	0.12	224	20SEP56M
	68	10.0	8.0		2400	40	0.12	272	20SEP68M
	100	10.0	8.0		2570	35	0.12	400	20SEP100MX
		8.0	12.0	E12	3320	24	0.15	400	20SEP100M
	150	10.0	13.0	F13	4320	20	0.15	600	20SEP150M

*1: Ripple current (100 kHz / +105 ℃)
*2: ESR (100 kHz to 300 kHz / +20 ℃)
*3: tan δ (120 Hz / +20 ℃)
*4: After 2 minutes
◆ Please refer to each page in this catarog for “Flow conditions” and “Taping specifications”.

Frequency correction factor for ripple current

Frequency(f)	120 Hz ≦ f < 1 kHz	1 kHz ≦ f < 10 kHz	10 kHz ≦ f < 100 kHz	100 kHz ≦ f < 500 kHz
Coefficient	0.05	0.3	0.7	1

Design and specifications are each subject to change without notice. Ask factory for the current technical specifications before purchase and/or use.
Should a safety concern arise regarding this product, please be sure to contact us immediately.

Safty Precautions

When using our products, no matter what sort of equipment they might be used for,
be sure to confirm the applications and environmental conditions with our specifications in advance.

Panasonic INDUSTRY

Panasonic Industry Co., Ltd.
Device Solutions Business Division

1006 Kadoma, Kadoma City, Osaka
571-8506 Japan

© Panasonic Industry

Unauthorized duplication of this catalog is strictly forbidden.
The contents of catalog are as of November 2024.